LUNAR ICY SOIL SAMPLING

Presenter:
M. Savoia - Selex ES

Selex ES

ASTRA 2015
11-13 May 2015, Noordwijk (NL)

150 YEARS OF TECHNOLOGY

Table of contents

Introduction

- Next missions targeted at very high/low latitudes are expected to find regolith characterized by the presence of ‘important’ fractions of volatile/ices among which water ice

- As far as Drilling operations, water ice acts as a bonding mechanism between regolith particles and it certainly may have an important effect on the strength of the regolith itself

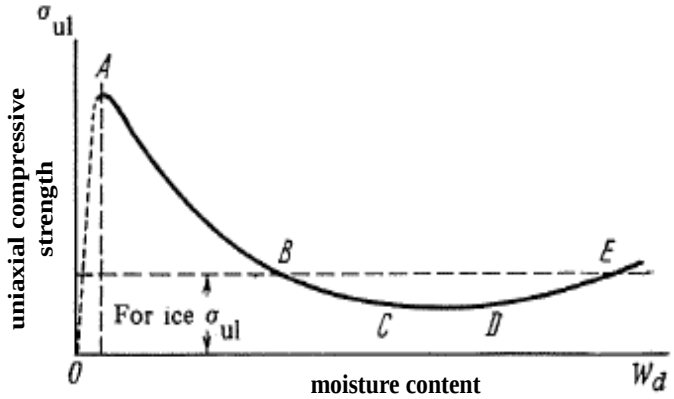

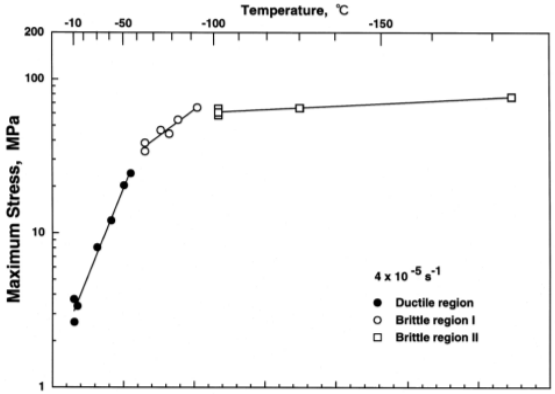

Soil strength trend with respect to ice concentration (left-Tsytovich, 1973, Fig. 80) and soil temperature (right-from a presentation of Kris Zacny)

Drilling and Sampling requirements

Main *sampling requirements* given for the Drill System development are summarized are summarized as:

- *sampling depth: selectable down to 2 meters*
- *sample size: ≈ d= 10 mm, L= 20-30 mm*
- *'sample integrity'*
- *recording temperature history*

Concerning *soil characteristics* the following requirements are taken:

Parameter	Unit	Value (referred @ 2 m depth)
Bulk density	*g/cm^3*	*2 (2.24 with 11.9% wt of water ice)*
Temperature	*K*	*120*
Thermal conductivity	*W/(cm*K)*	*$2.5*10^{-2}$*
Water content	*%*	*11.9 (saturation)*
UCS	*MPa*	*95*

Drilling and Sampling requirements (cont.)

Concerning sample(s) integrity:

- integrity of physical form (e.g. association of volatiles with soil components, avoiding phase transitions, stratigraphy/layering);
- quantitative integrity (e.g. minimize volatiles loss)
- chemical contamination (i.e. introduction of foreign material into sample; sample-to-sample cross contamination)

Concerning the minimization of volatile loss, conditions of *'temperature increase', 'max allowed time'*, *sample size*, need be duly considered and understood in the frame of state diagrams and sublimation cure profiles, for example:

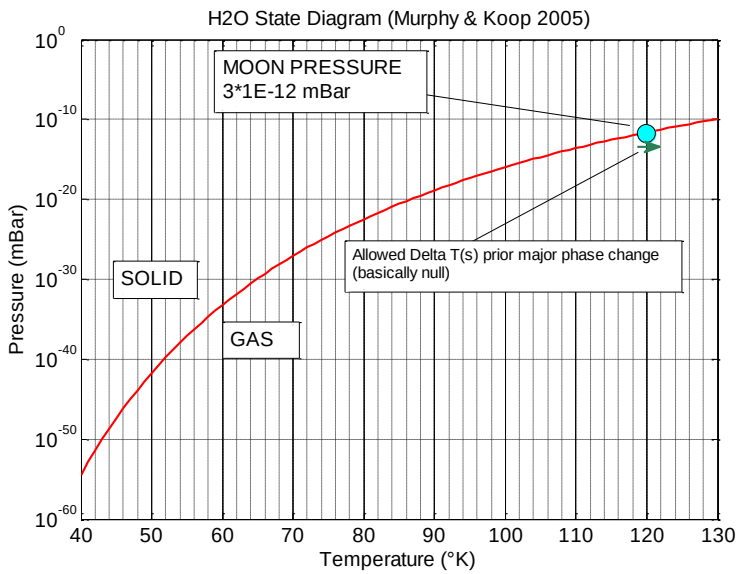

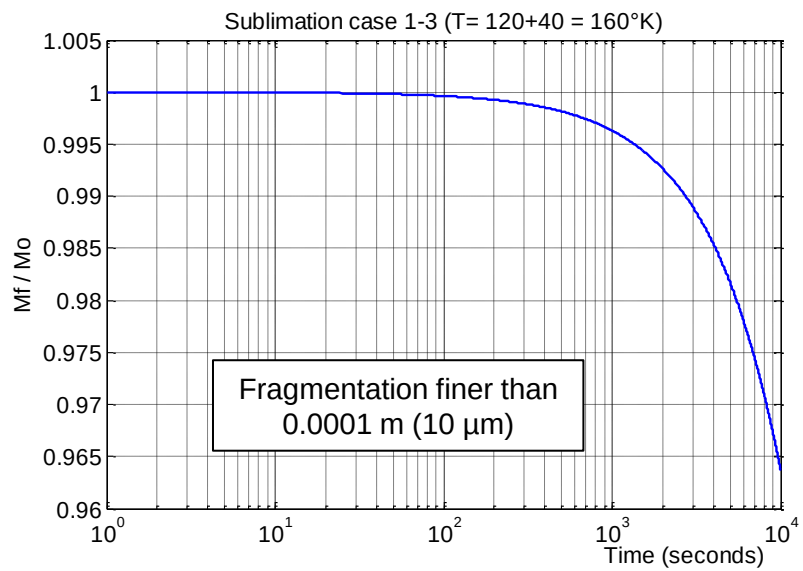

Drill preliminary configuration

The Drill System is now conceived as formed by two main elements

- *the Drill* proper it is based on a *single string driven by a roto-hammer mandrel* plus a translation stage and is capable to reach selectable depth ranging from surface down to 2 meters
- *the Positioner* now conceived as a double degree of freedom device

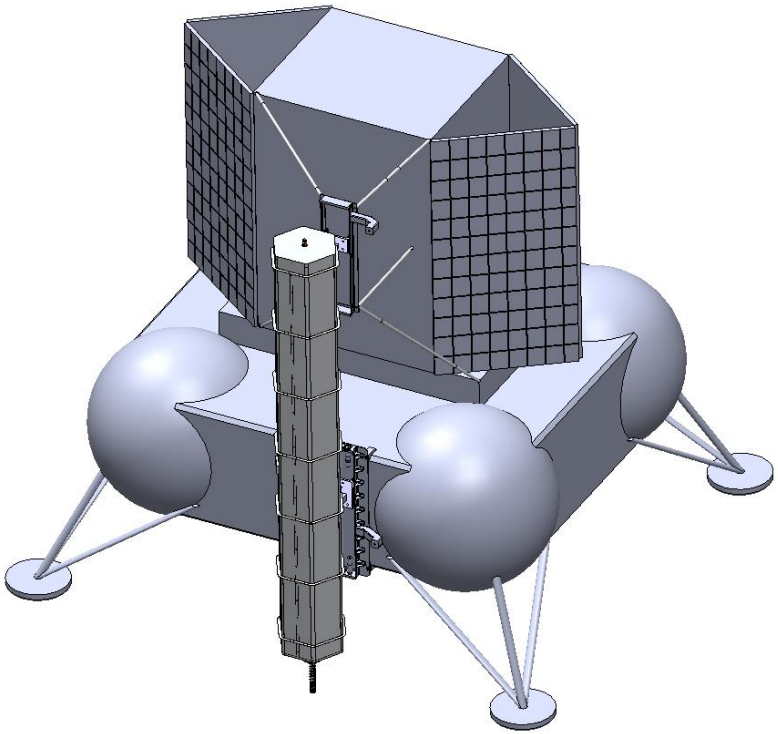

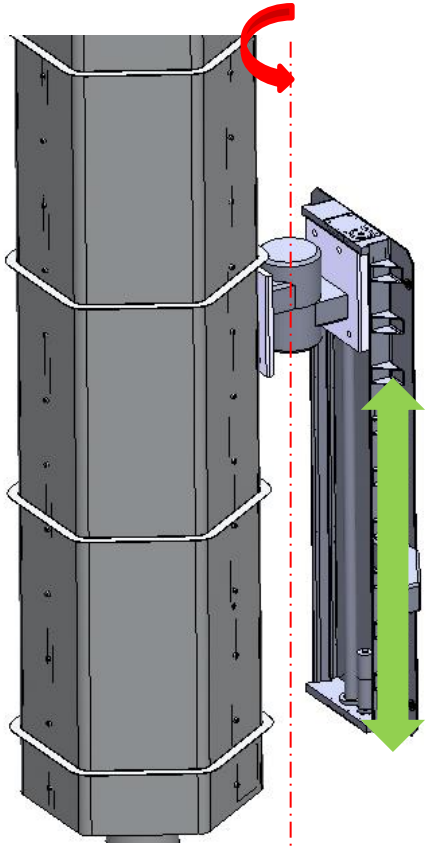

Drill preliminary configuration

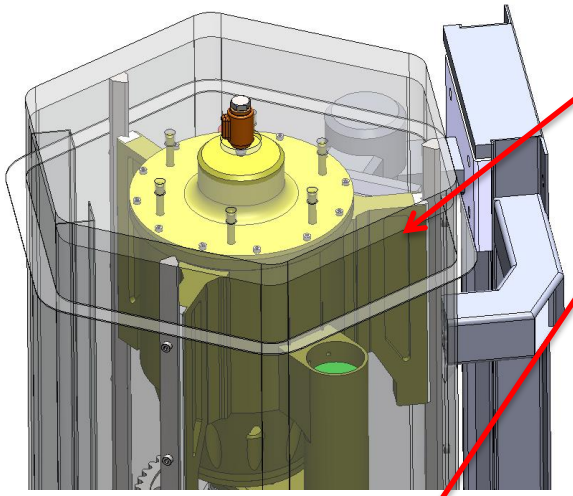

- Drill translation guides
- Hammer actuator embedded inside the mandrel
- Spider mechanism to support drill rod
- Drill translation screw

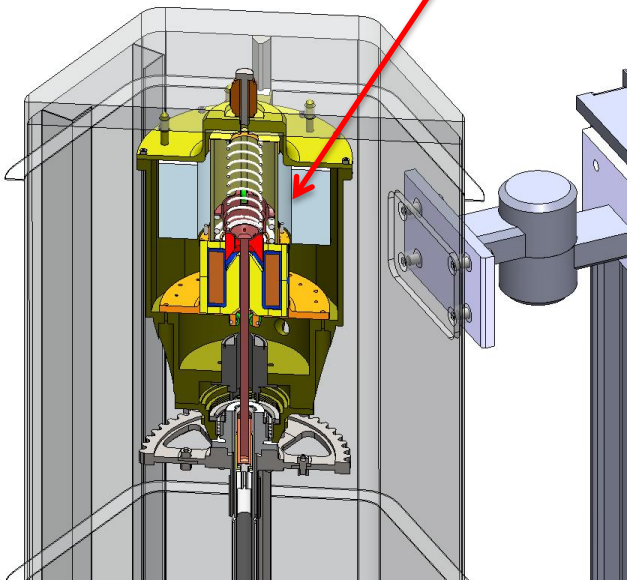

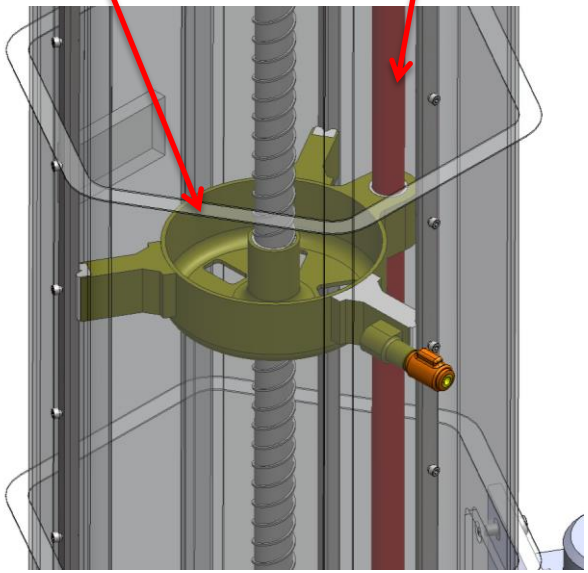

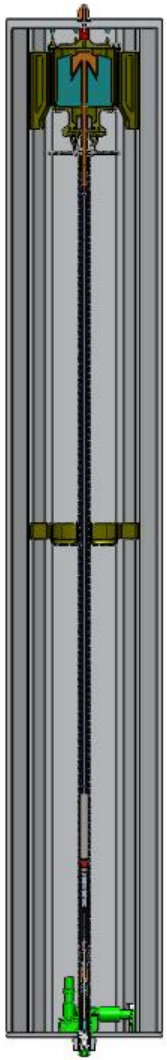

Drill preliminary configuration

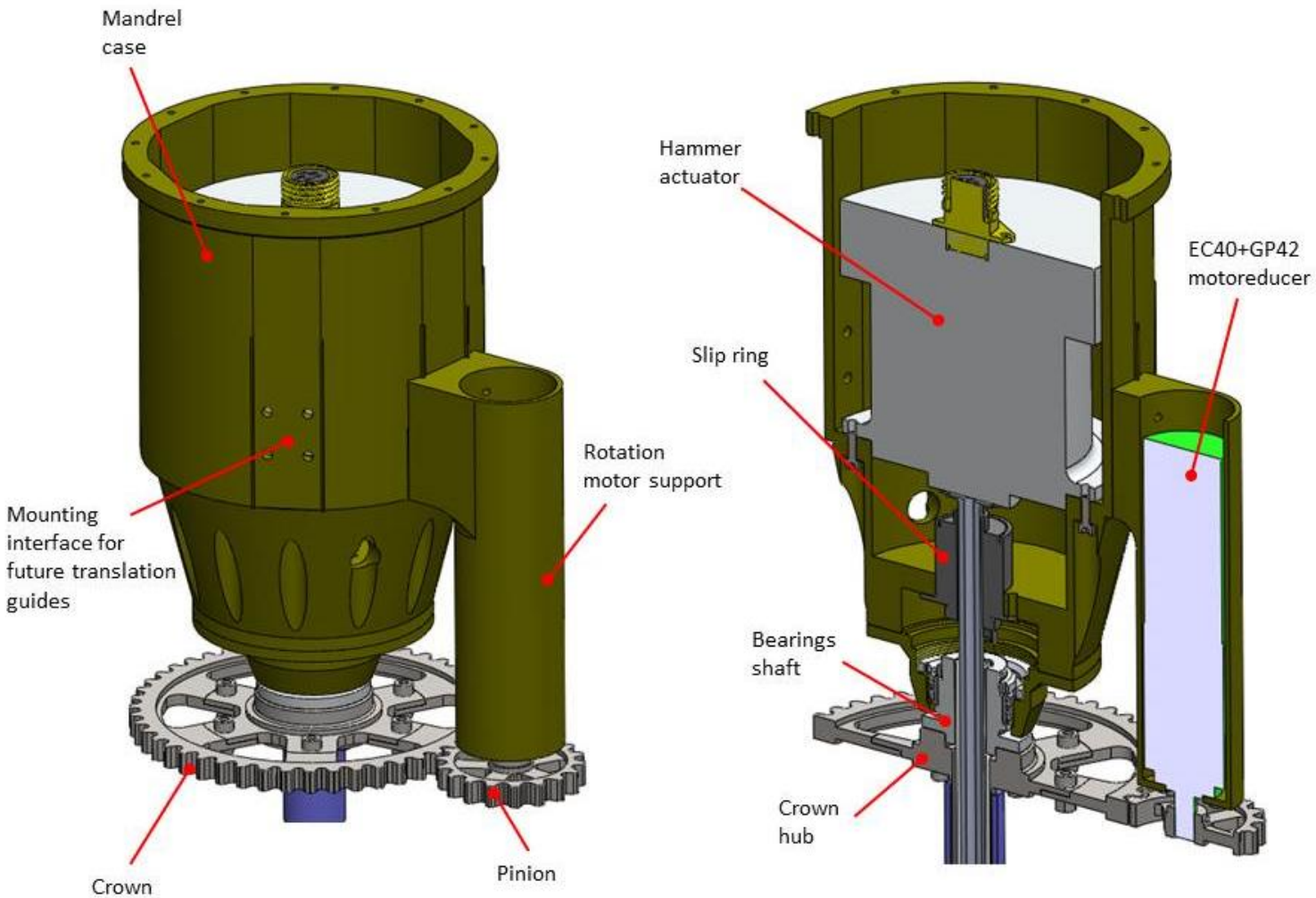

Hammer actuator

- Embedded on top of the mandrel assembly
- Operating in the range of 10 / 15 Hz
- Energy involved for each strike in the order of 2J
- Operating in resonance mode

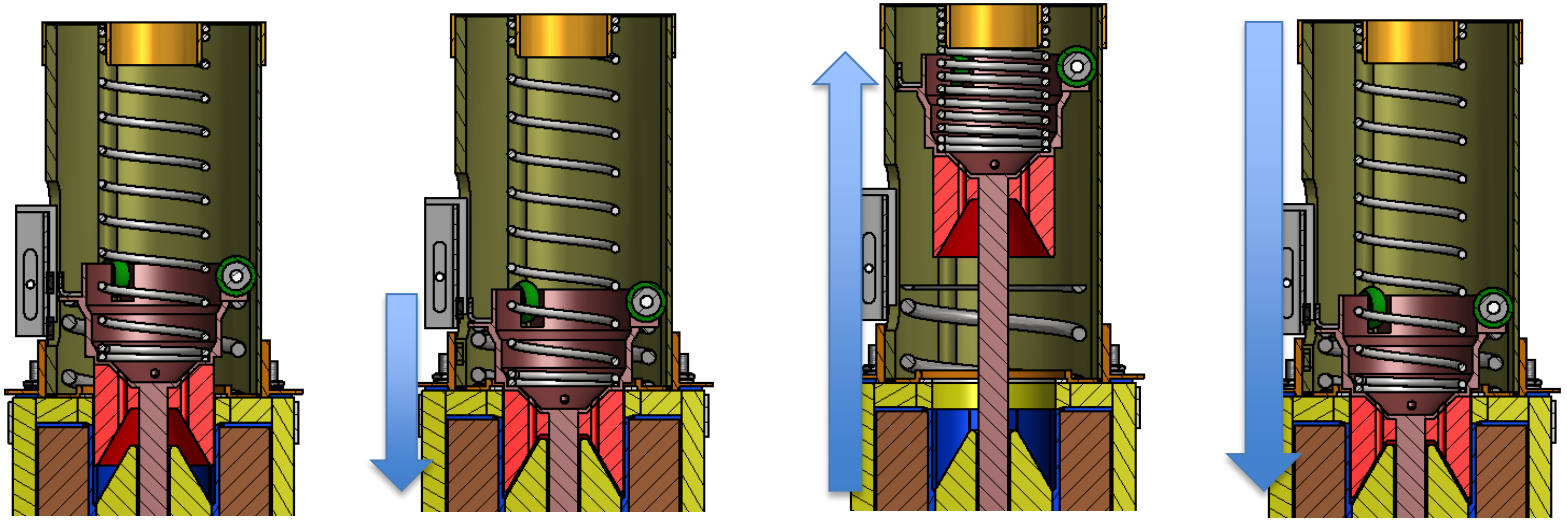

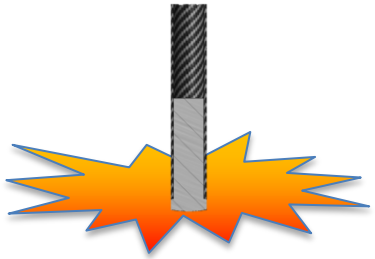

Hammer indexing

- indexing can be defined as the front bit rotation angle advance between two subsequent strikes.
- should be selected such to render efficient, the ‘chisel’ strike on the surface:
  - A too low indexing imply extra unused energy injected into the soil
  - A too large indexing imply a low efficiency of the strike action

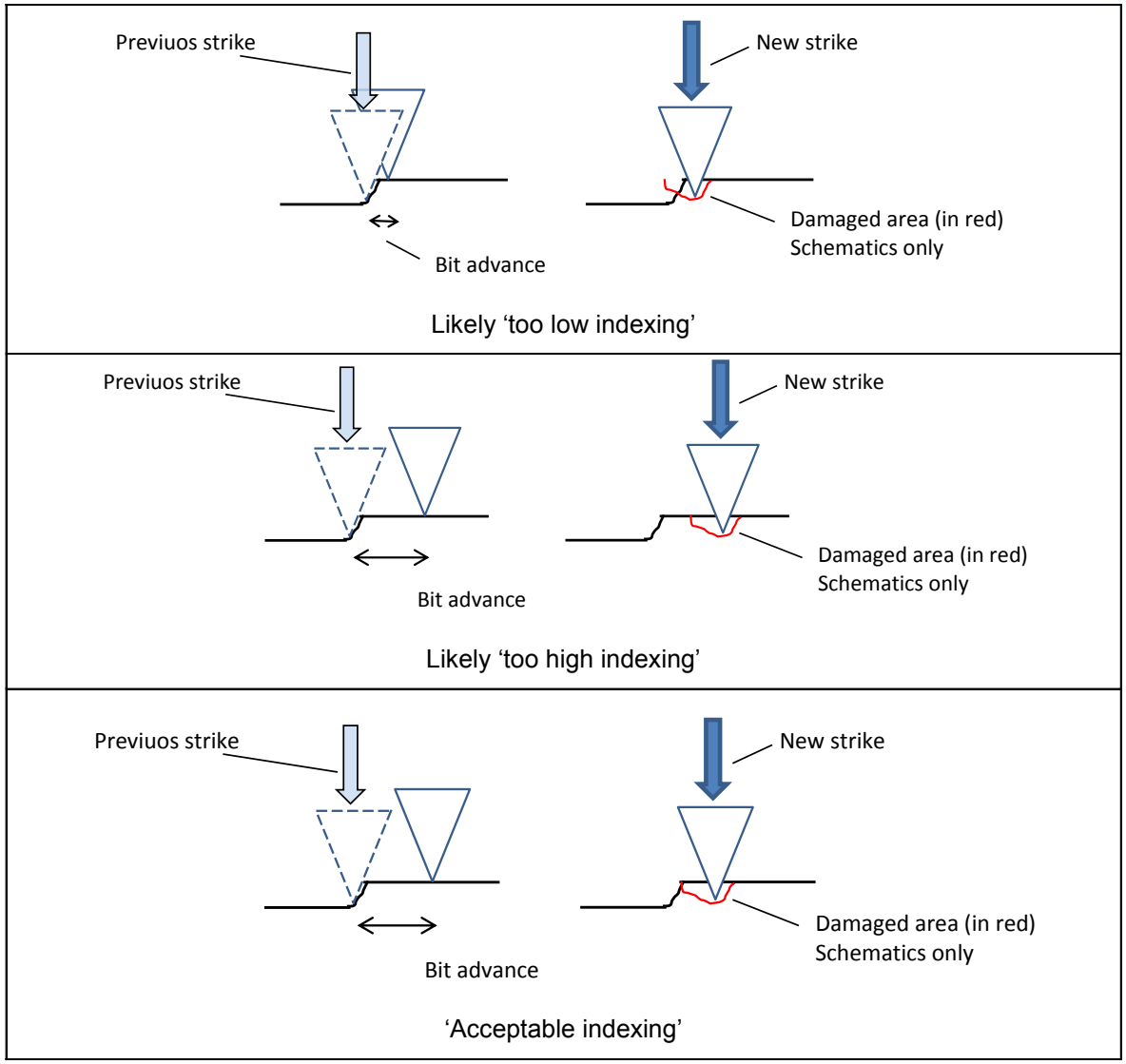

Sampling tool (L-GRASP)

- Designed to cope with hard saturated material and loose dry soil
- Actuated by a motoreducer invisible to hammer percussive action
- Two embedded temperature sensors (sampling chamber and bit) to monitor the material temperature variations

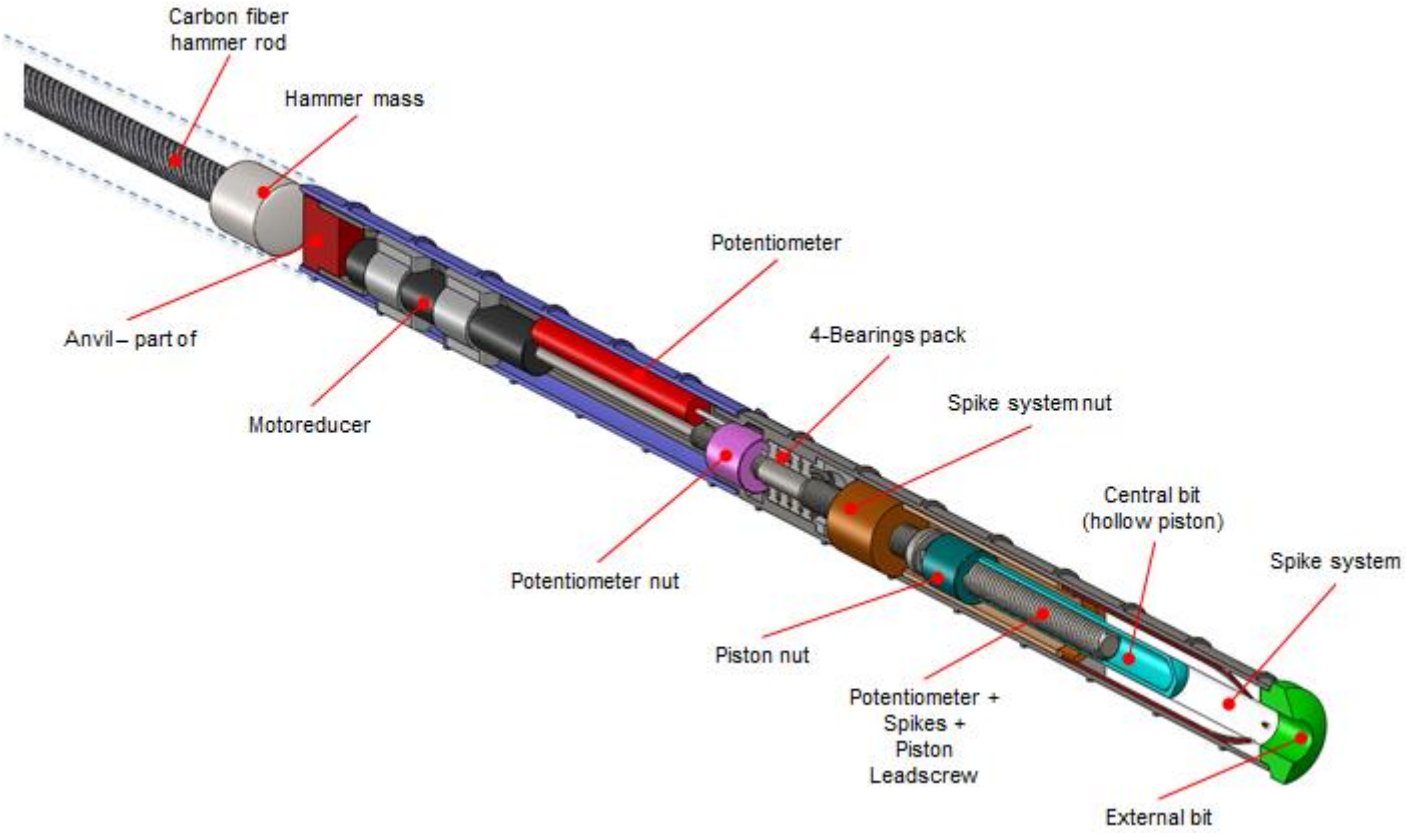

Sampling tool: Operations

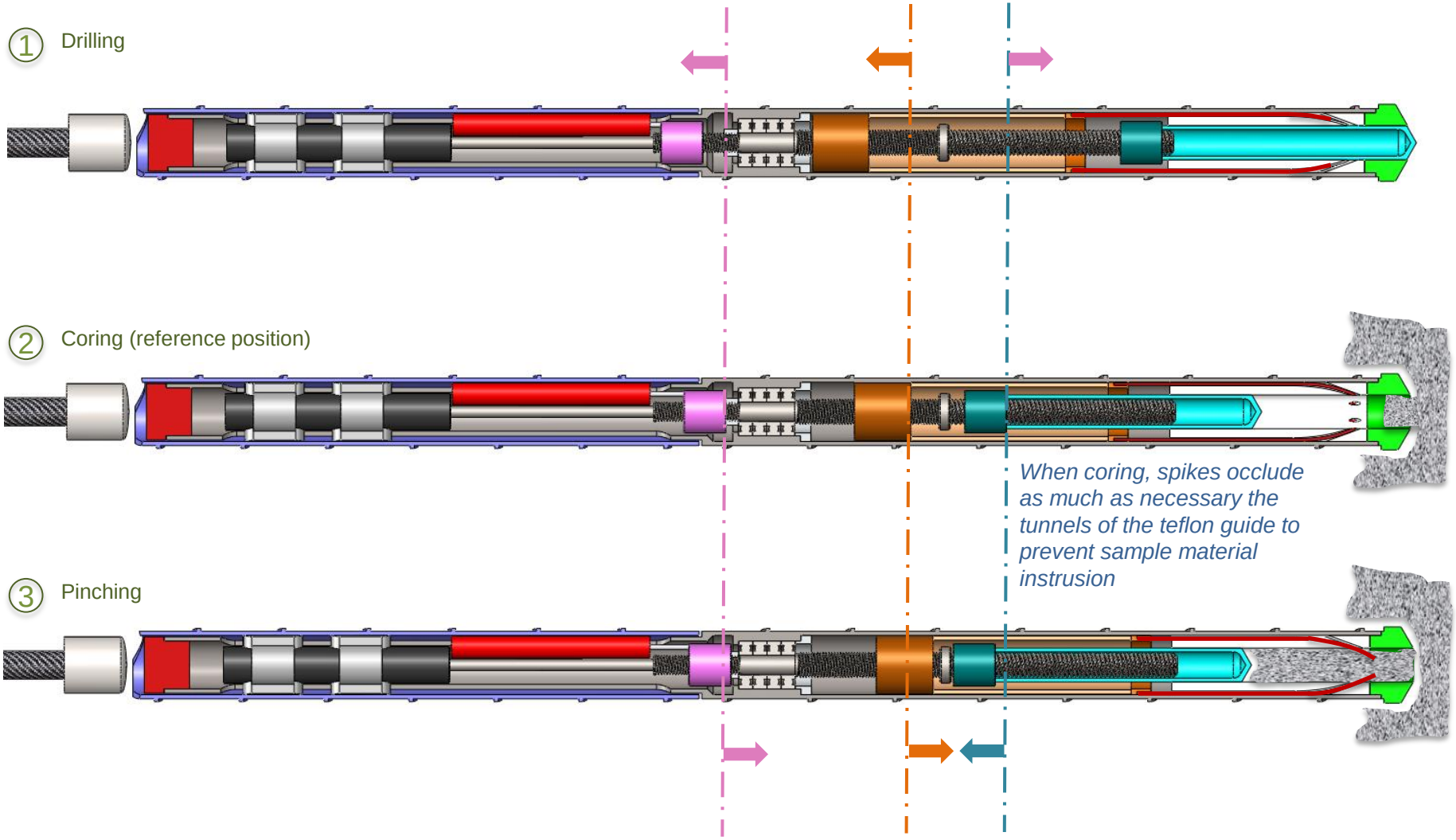

Sampling tool: discharging the sample

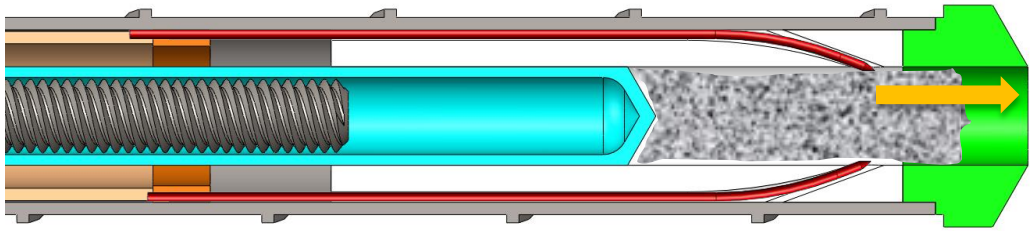

When pushing out the sample, the tunnels acute angles (w.r.t to moving direction) naturally prevent sample material entering the empty spaces

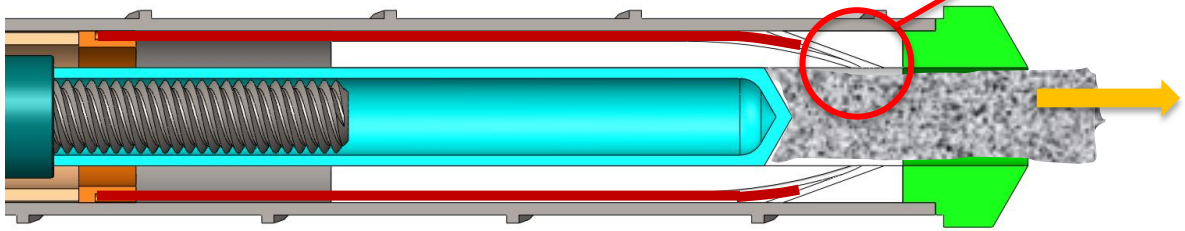

Drilling depth vs vertical envelope

Table 6 - Design parameters

Distance	Description	Value [mm]	Comments
A	Upper plate tickness	20	
B	Mandrel height	310	
C	Spider height	50	
D	Drill translation blocking height + Lowe plate	67.5	
E	Brush height	80	
F	Minimum required distance from the soil	150	
W	"Wasted" length	677.5	W = A+B+C+D+E+F

Table 7 - Case 1: Envelope driven

Distance	Description	Value [mm]	Comments
X	Vertical envelope	2300	Input
L	Rod length (inclusive of sampling tool)	1970	L = X-A-B
Y	Drilling depth	1622.5	Y = L-C-D-E-F
S	Drill translation needed stroke	1772.5	S = Y+F

Table 8 – Case 2: Drilling depth driven

Distance	Description	Value [mm]	Comments
Y	Drilling depth	2000	Input
L	Rod length (inclusive of sampling tool)	2347.5	L = Y+F+E+D+C
X	Vertical envelope	2677.5	X = L+B+A
S	Drill translation needed stroke	2150	S = Y+F

Table 9 - CAD modelling at the moment

Distance	Description	Value [mm]	Comments
X	Vertical envelope	2410	Input
L	Rod length (inclusive of sampling tool)	2080	L = X-A-B
Y	Drilling depth	1732.5	Y = L-C-D-E-F
S	Drill translation needed stroke	1882.5	S = Y+F

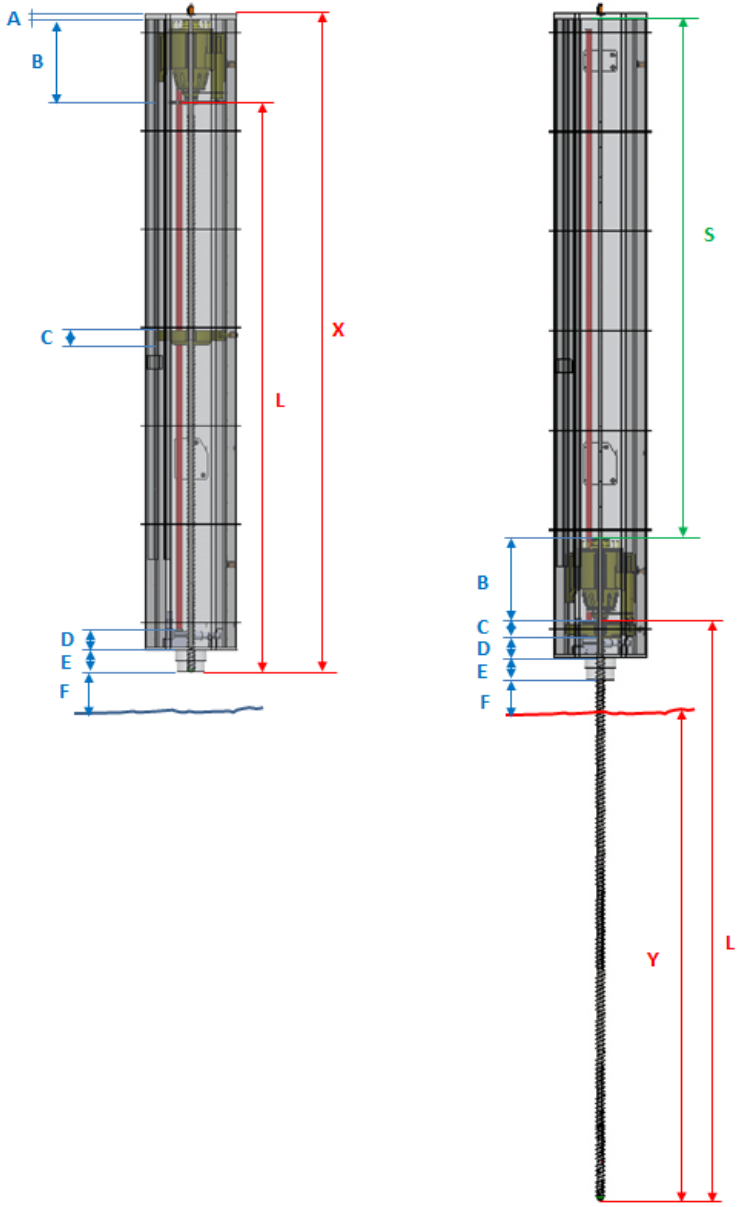

Test activity

In the frame of the running activity, two typologies of test are foreseen:

- early tests (Concept Assessment Tests) on prototypes of cutting/sampling heads (completed)
- testing at Drill Breadboard level (scheduled by 2015)

Early tests on prototypes of cutting/sampling heads have been performed on six different solution/sizes, some of them based on PCD diamond technology and some on carbide technology (under Argon glove box and temperatures range -150/-100°C)

Soil simulant an admixture of:

- 'base regolith' NU-LHT-2M
- volatile/ices entrapped in various forms (percentages of 6% and 11.9% saturated)

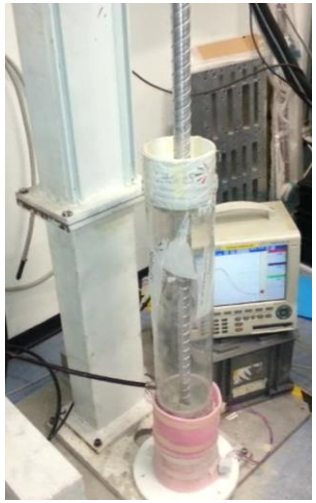

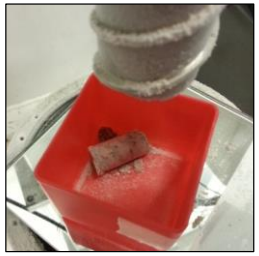

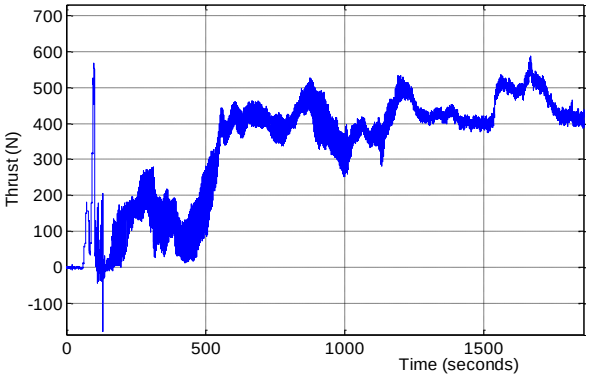

Example of recorded plot (it refers to 36 mm bit, solid ice, no hammer)
-Example only-

Test activity (cont)

A Drill Breadboard is designed and will be manufactured *representative of the final Drill System model as far as the key aspects of*:

- roto-hammer group
- length of drill string
- sampling tool

This Drill BB will be tested over strokes of 700 mm utilizing a specific test equipment in:

- lab conditions (sample material conditioned in the -165/-100 °C range under glove box
- dedicated Thermal Vacuum (T/V) chamber with the soil specimen conditioned at -180 °C

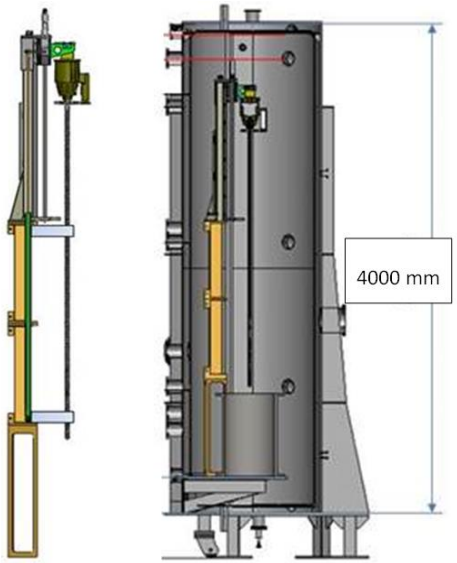

Schematics of the Drll BB installation in the large T/V chamber

Test activity (cont)

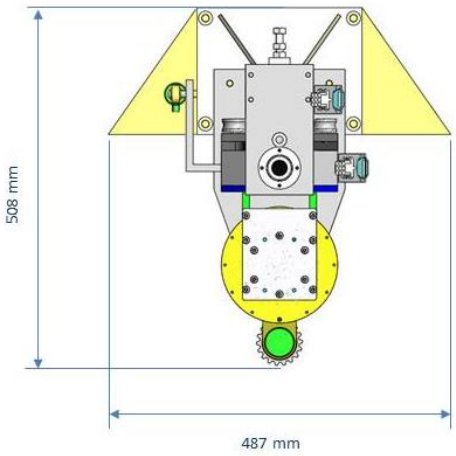

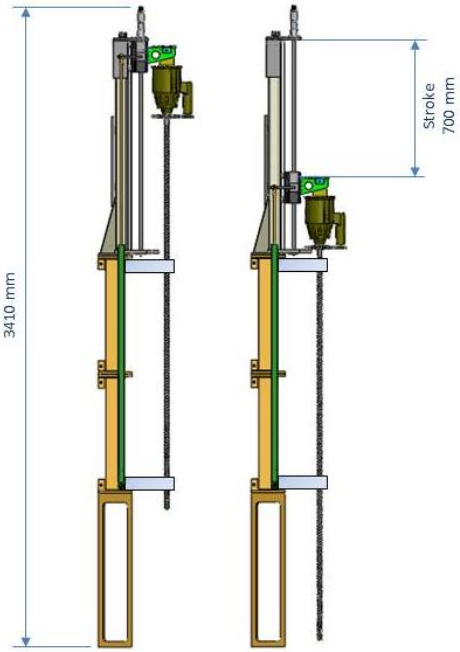

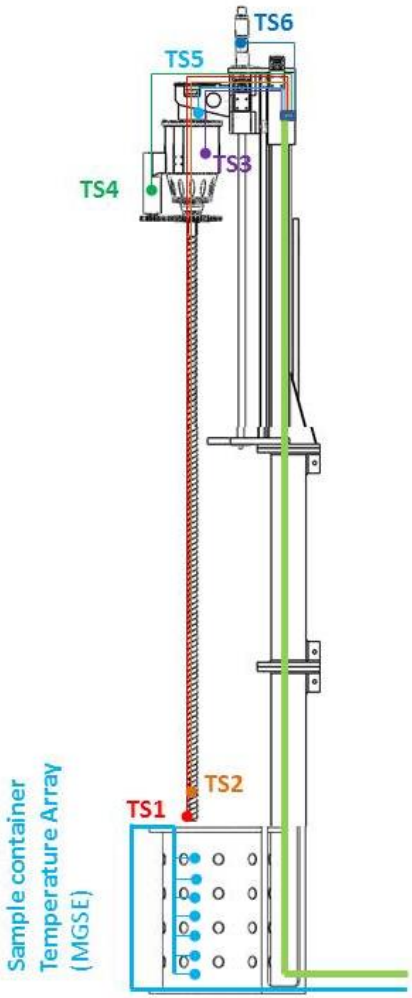

TS1 = drill tool bit (L-GRASP)
TS2 = sampling chamber (L-GRASP)
TS3 = hammer actuator hotspot
TS4 = rotation motor
TS5 = force/torque sensor (MGSE)
TS6 = translation motor (MGSE)

Concept Assessment Tests: example (Tool 36mm – bits -15°)

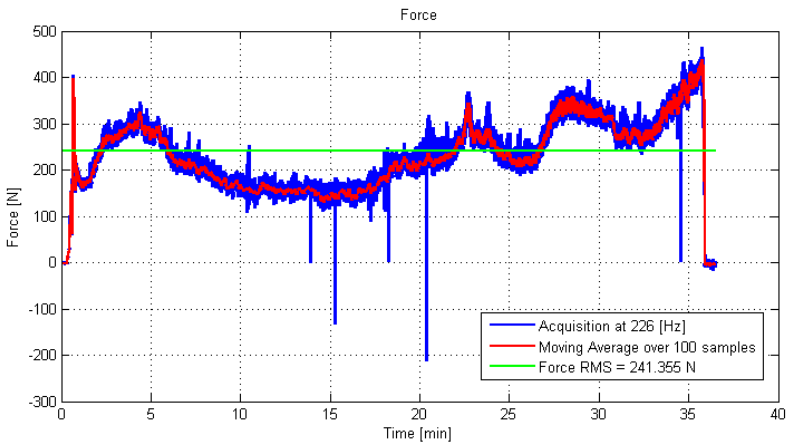

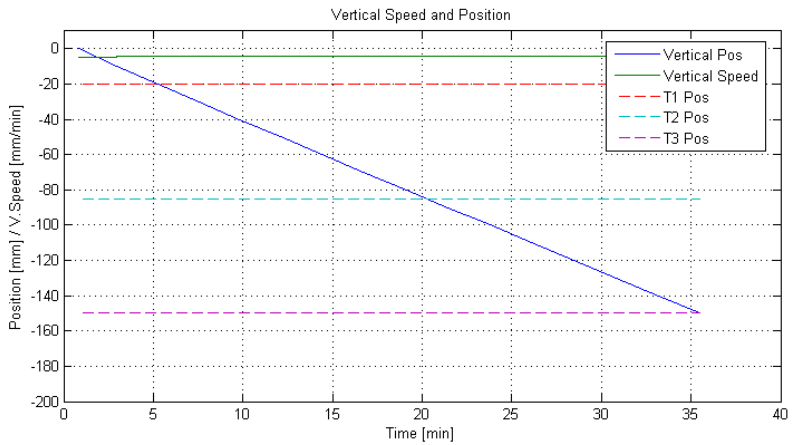

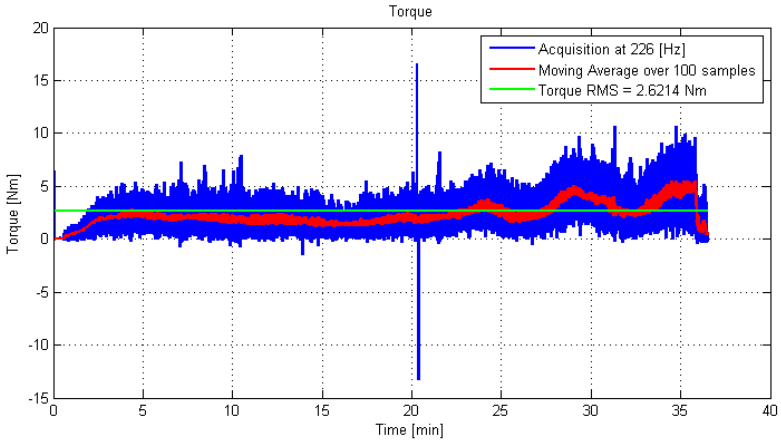

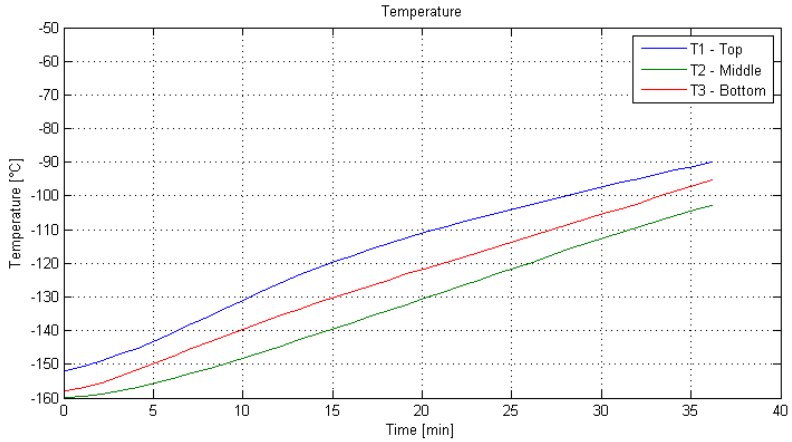

Concept Assessment Tests: example (Tool 36mm – bits -15°)

$$P_m = (C \cdot \omega + F \cdot v + f \cdot J \cdot K)$$

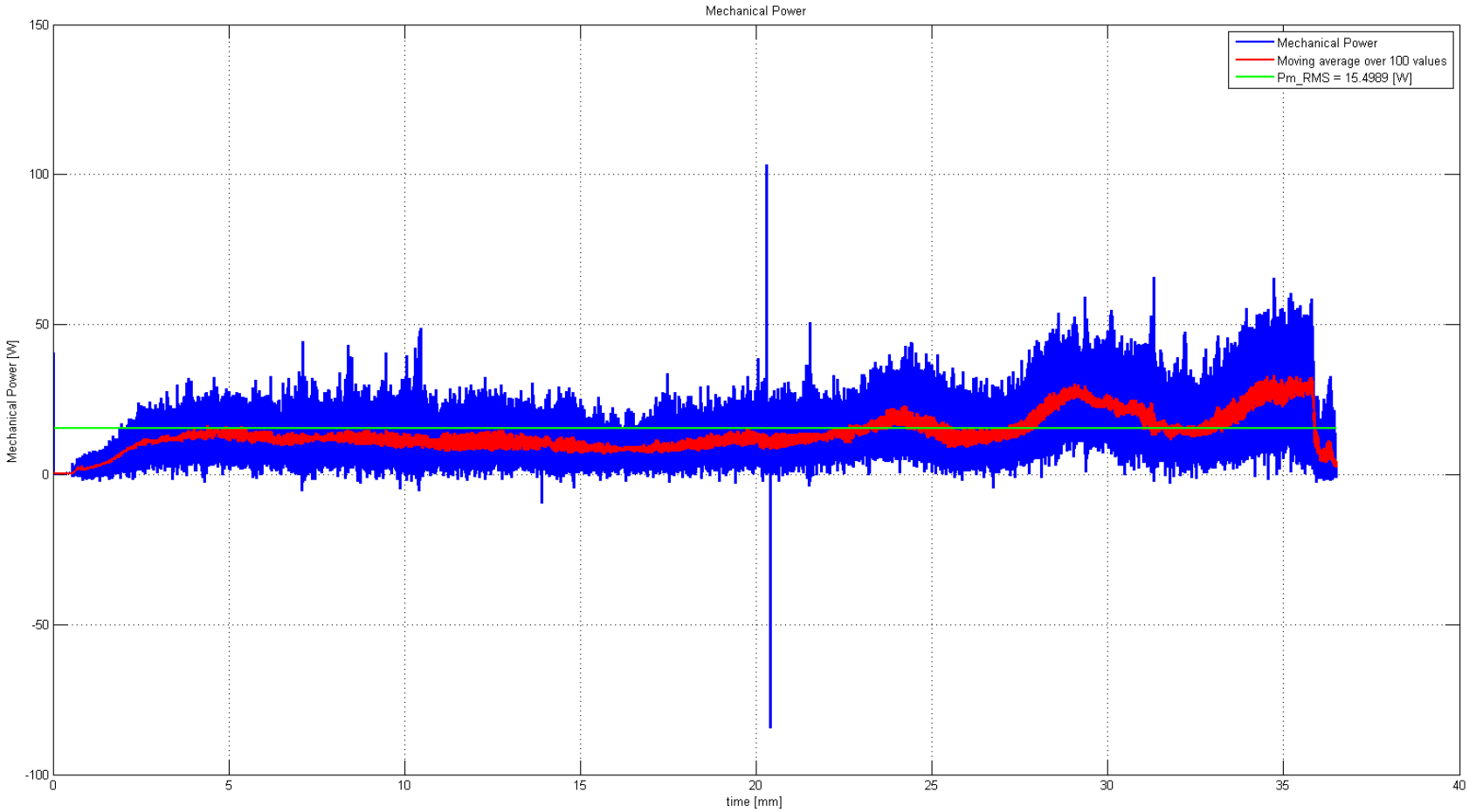

Concept Assessment Tests: some results

Force / Torque

Water content	Tool size →	Φ36 mm		Φ26 mm	
	Bit angle →	0°	-15°	0°	-15°
5.9%	*Force RMS [N]*	215	48	84	76
	Torque RMS [Nm]	1.76	0.5	0.34	0.45
11.9%	*Force RMS [N]*	246	241	209	496
	Torque RMS [Nm]	2.94	2.62	0.72	3.7

Mechanical power: $P_m = (C \cdot \omega + F \cdot v + f \cdot J \cdot K)$

Water content	Nexus Φ36		Nexus Φ26	
	0°	-15°	0°	-15°
5.9%	9.5 W	2.9 W	1.8 W	2.3 W
11.9%	17.5 W	15.5 W	3.6 W	22 W

- Average advancing (vertical) speed = 5 mm/min

Concept Assessment Tests: hammer influence

Embedded hammer actuator (in string built) from previous program development was tested:

- Low frequency mechanical actuator (1Hz)
- Low energy involved (0.5 J)

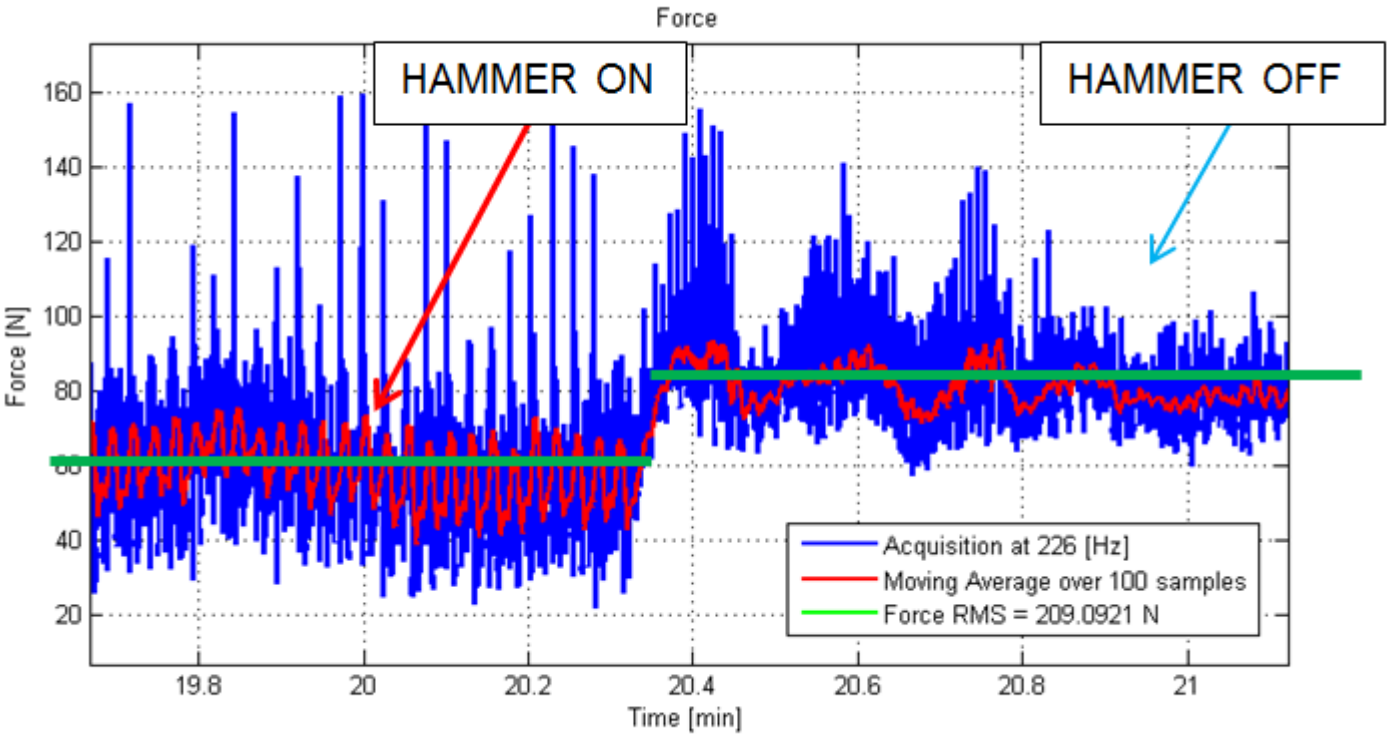

Concept Assessment Tests (unofficial): pure ice at - 160° C

- Drill tool: D=36 mm, Beta=0° , Carbide, Coated (ice-rejection)
- Specimen: water Ice conditioned at -160° C
- Coating: CRC TEFLUB Spray (three subsequent applications separated by 10 minutes)

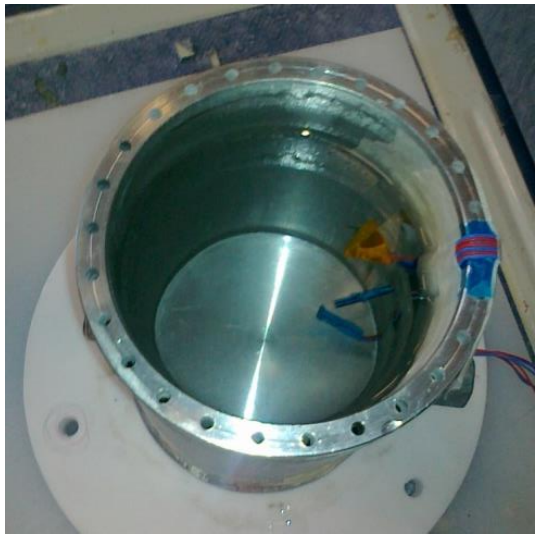

Initial water filling (-9% in volume for expansion accomodation)

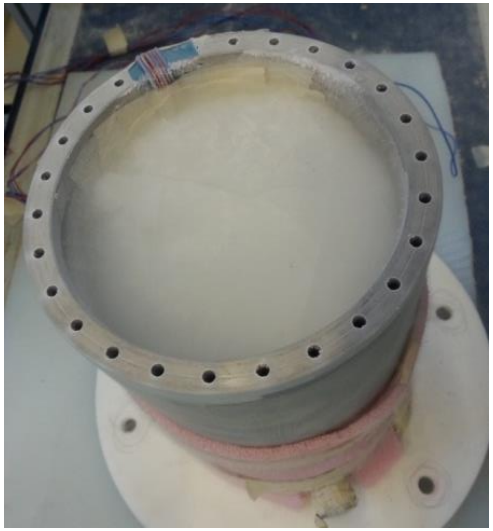

Icy specimen

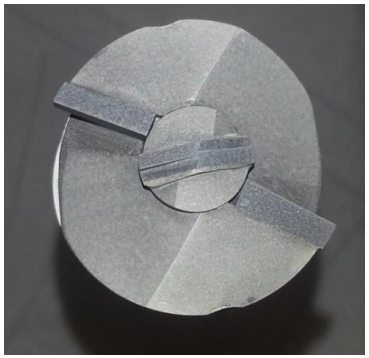

Concept Assessment Tests (unofficial): pure ice at - 160° C

- Specimen temperature during test: from -160 to -100° C
- Speed range: 5, 7.5 and 10 mm/min
- Drill depth: 150+20 mm
- Max thrust level: 600 N
- Max torque level: 5.5 Nm

OK-bit-20150428_133411.mp4

OK-estrazione-20150428_132646.mp4

OK-drill-20150428_130848.mp4

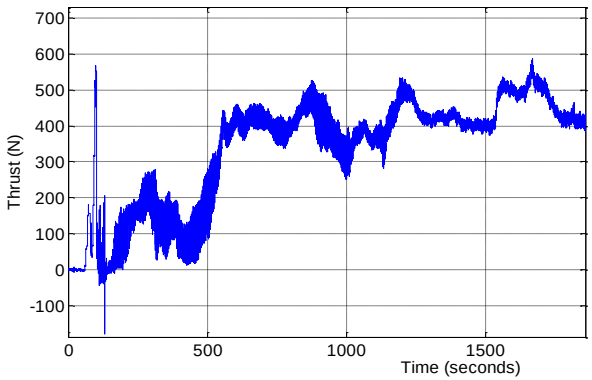

Thrust profile (unfiltered @ 200 Hz)

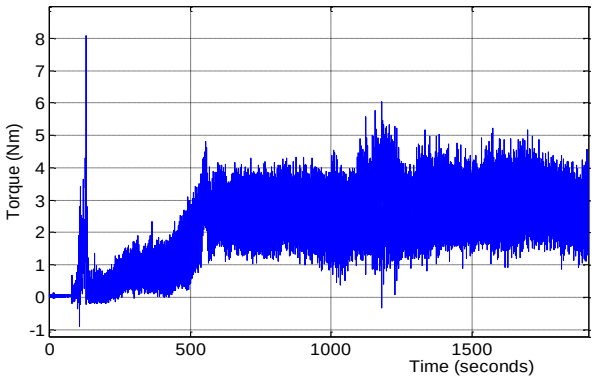

Torque profile (unfiltered @ 200 Hz)

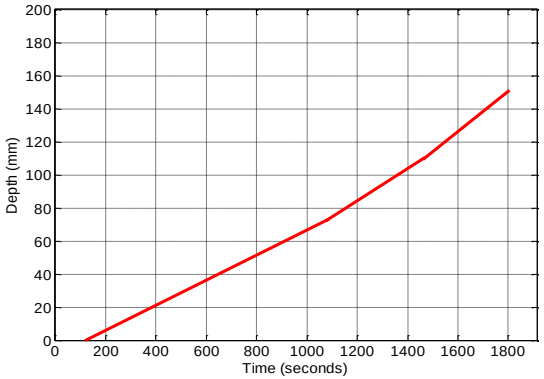

Depth profile (+ 20mm) - schematics

Energy exchange model

Data from Concept Assessment Test is used to:

- Validate e calibrate the energy exchange model under development at Politecnico di Milano
- Estimate the temperature increase on the sample material due to heat dissipation

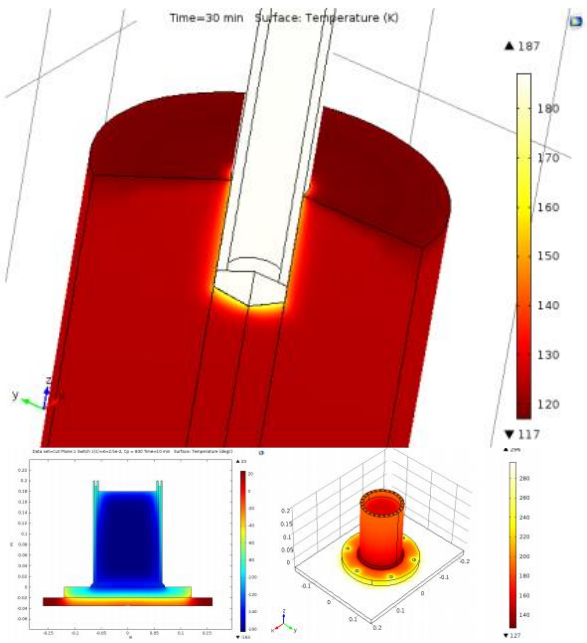

Figure 18- Temperature distribution at 10 minutes (cut view on the left, 3D view on the right)

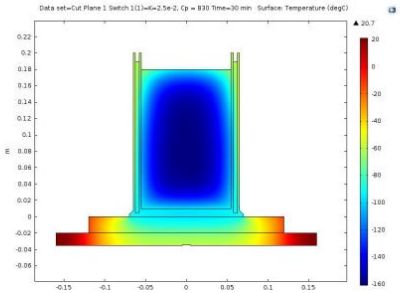

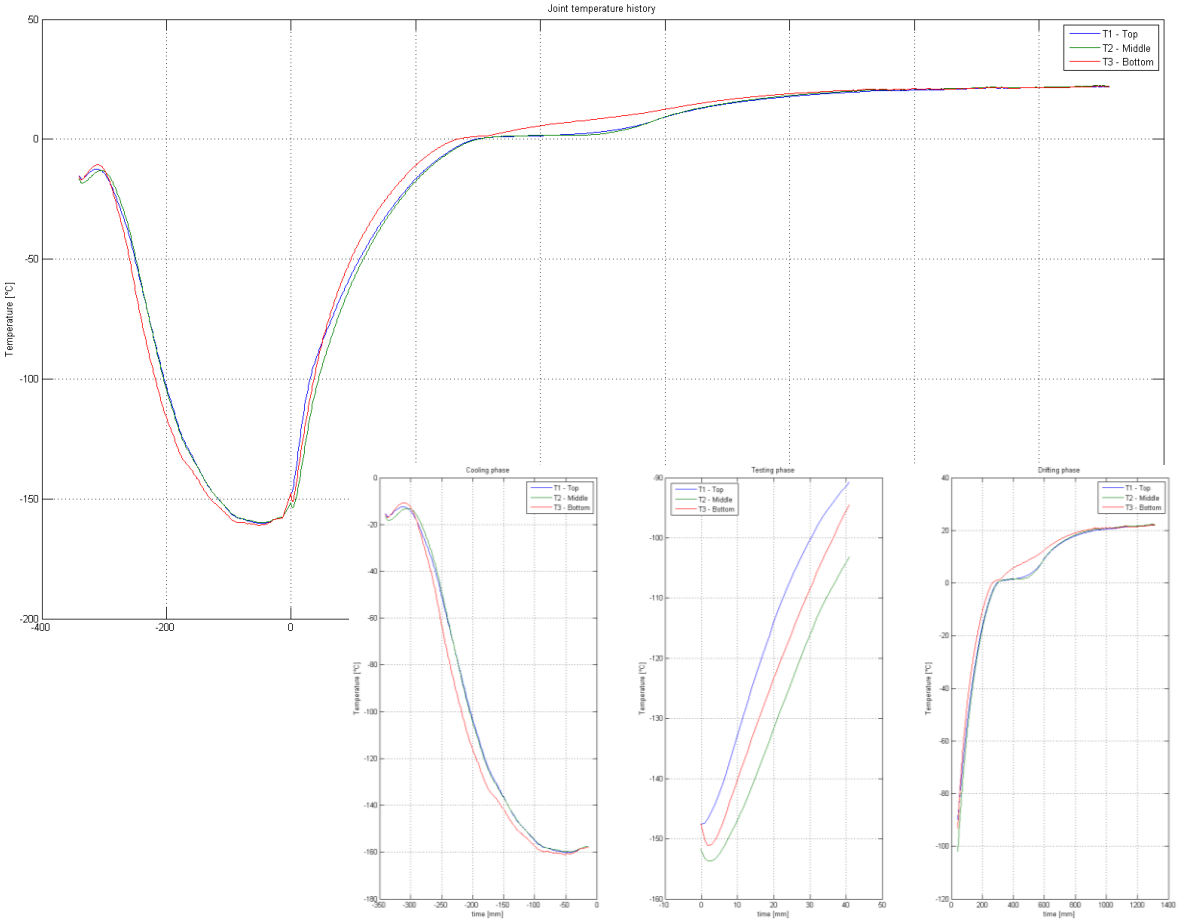

Conclusions

Three specific activities are being presently developed for Moon low latitude scenario at Selex-ES on behalf of ESTEC

The outcomes will encompass:

- Drill System plus Sampling Tools Breadboards specifically tested in representative conditions (up to saturated icy regolith)

- detailed Icy Sample Handling chain analysis with special attention to sample integrity and preservation

The outcomes of such activities will certainly support a deeper insight on the problematics related to drilling and sampling in the Moon South Pole hostile environment

THANK **YOU** FOR YOUR ATTENTION

M. Savoia

Address or e-mail reference