Dextrous Lightweight Arm for Exploration (DELIAN)

13th Symposium on Advanced Space Technologies in Robotics and Automation

ASTRA 2015

11-13 May
ESA/ESTEC, Noordwijk, the Netherlands

Selex ES RUAG csem centre suisse d'électronique et de microtechnique

ThalesAlenia Space A Thales / Finmeccanica Company BLUEBOTICS Mobile Robots at Your Service

150 YEARS OF TECHNOLOGY

Introduction

- DELIAN project:
  - Study in the frame of ESA's Mars Robotic Exploration Preparation (MREP) Programme

- Objective:
  - Develop the technology building blocks to aid the development of a class of robotic arms for the future Martian rovers and landers

- Key aspects:
  - Minimisation of resources (mass, power, dimensions)
  - Low velocity, medium torque, medium-high positioning accuracy

- Project divided in three phases:

1. DELIAN definition (mission analysis, system requirements and architectural design);
2. Development and testing of a joint prototype, control system simulation and breadboarding;
3. DELIAN arm development and functional testing

© 2014 Selex ES S.p.A. – All rights reserved

Mission analysis and requirements

- Mission scenarios:
  - Four planetary (Mars) missions but also a low gravity body mission (Moons of Mars)
  - Activity analysis (operational tasks, workspace, etc.)

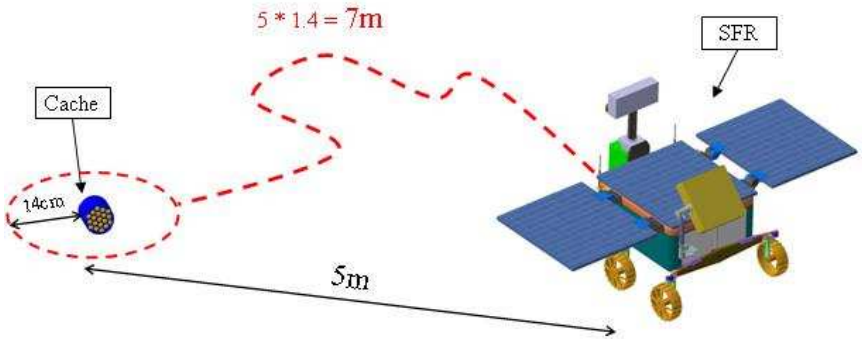

- Main requirements and characteristics:
  - Arm length: 0.9 m to 3.6 m;
  - Operational force at the end effector: 10 to 30 N
  - Payloads: 1 to 6 kg
  - Arm mass: 3 to 9 kg (excluding payload harness and end effector);
  - Arm electrical power: 8 to 40 W
  - Low Joint velocity: 0.7 deg/s
  - High positioning accuracy (1.5 to 5 mm for some specific tasks)

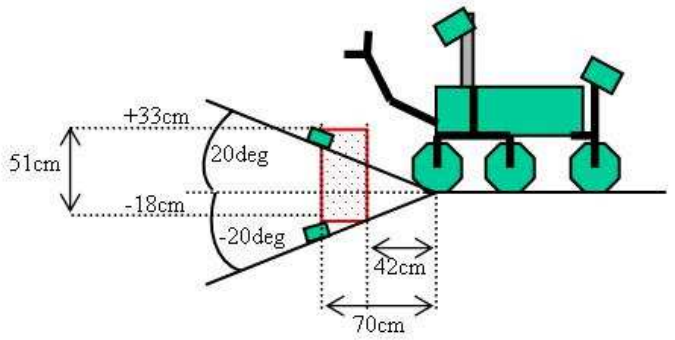

© 2014 Selex ES S.p.A. – All rights reserved

Architectural design approach

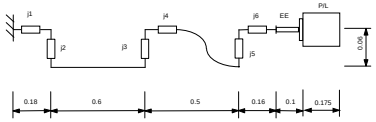

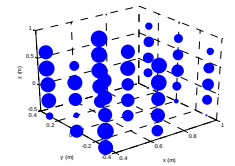

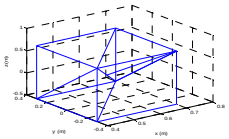

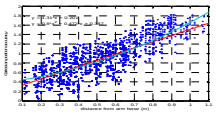

System and
S/S specification

Arm kinematics and preliminary load analysis

Preliminary joint sizing

Joint architecture trade-off and scalability analysis

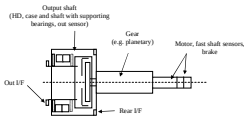

1 2 3 4

Suggested kinematics:
DoF, length, offsets

Joint architecture and components
4 joint families (mass, torque, power, dimensions)

DELIAN arm geometrical and CAD modelling
Harness routing
Load analysis, in stowage and operational configuration
Preliminary thermal analysis
System budget

DELIAN arm architecture and preliminary design (scenario A, B, C, D)

© 2014 Selex ES S.p.A. – All rights reserved

Scenario A: acquisition of a cached sample

- Reference mission: Sample Fetching Rover
- 5 DoF arm, with a length of 0.87 m and a mass of about 3.2 kg
- 0.5 m horizontal workspace (distance from arm base to cache pick up location)

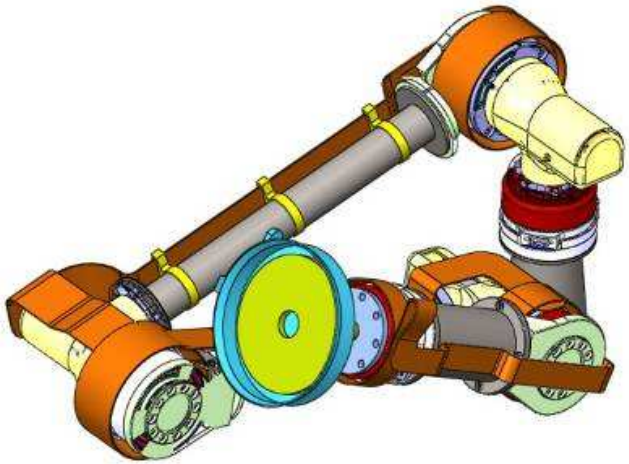

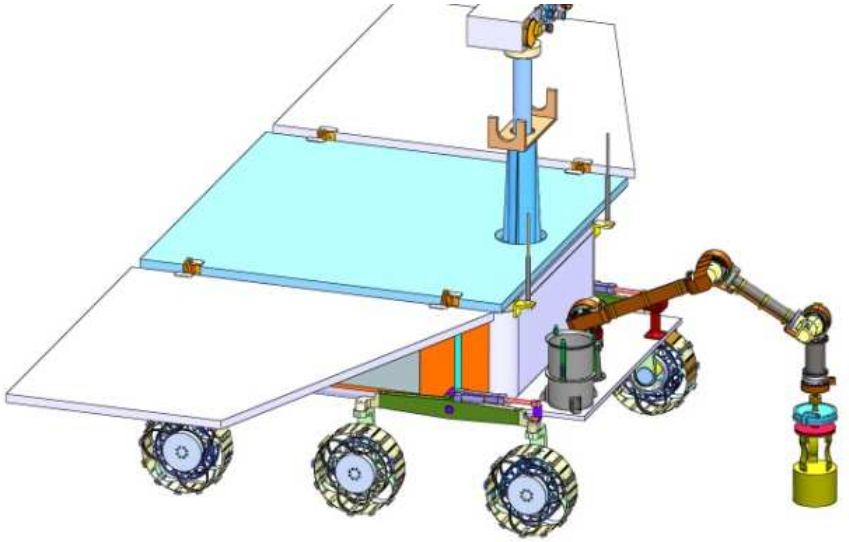

© 2014 Selex ES S.p.A. – All rights reserved

Scenario B: scientific instrument deployment

- Lander reference mission, e.g.:
  - Mars Geodesy and Environment Network (MarsGEN)
  - Mars Network Science Mission (MNSM)
- Sizing factor is the placement of a 6 kg seismometer at 1.7 m from the lander
- 4 DoF arm, with a length of 2 m and a mass of about 5.1 kg

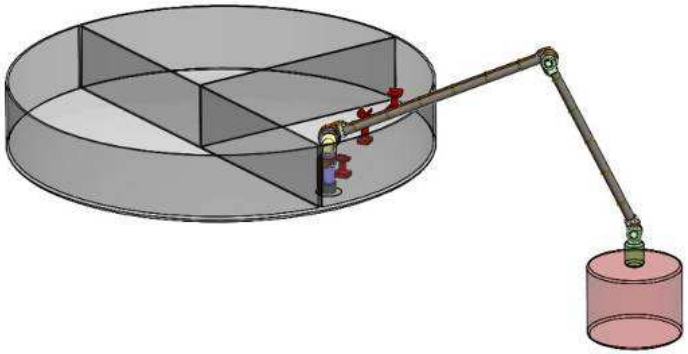

© 2014 Selex ES S.p.A. – All rights reserved

Scenario C: sample collection and deposition

- Excavator like arm (e.g. Phoenix) equipped with scoop/blades
- 4 DoF arm with a length of 2.2 m and a mass of about 5.6 kg

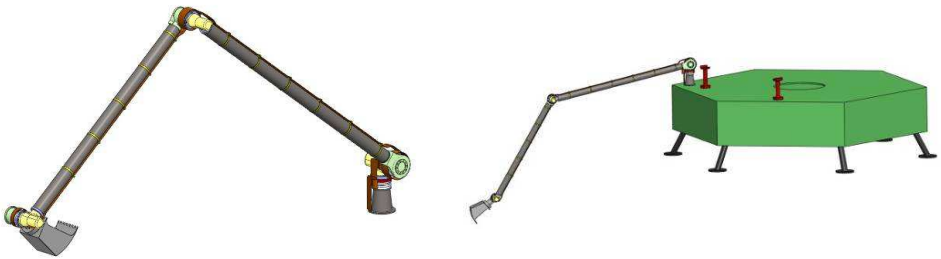

- Multipurpose arm for sample return (e.g. Moons of Mars)
- Sampling/coring, but also opening of the re-entry capsule, exchange of end effector, latching/unlatching)
- 5 DoF arm with a length of 3.6 m and a mass of about 8.3 kg
- Need of offload device at Earth 1-g

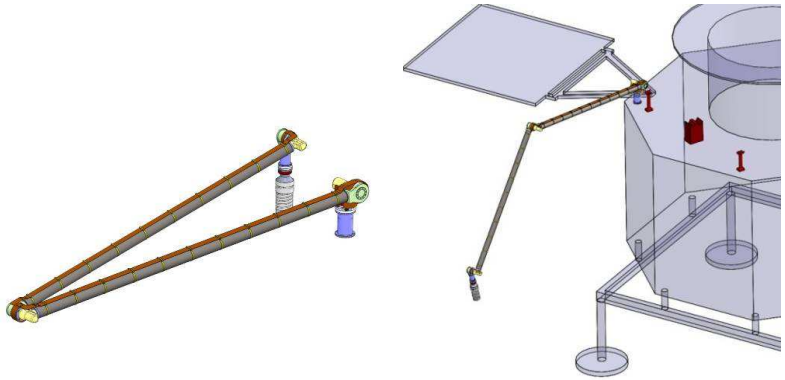

© 2014 Selex ES S.p.A. – All rights reserved

Scenario D: scientific instrument deployment

- Reference missions:
  - early ExoMars
  - Spirit and Opportunity Mars Exploration Rovers (MER)
- 5 DoF robot with a length of 1.4 m, a mass of 4 kg, handling a 2.5 kg payload
- Required positioning accuracy is 1.5 mm

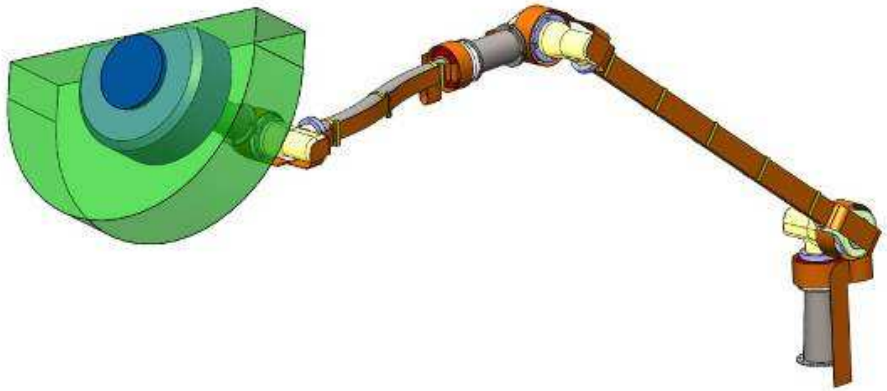

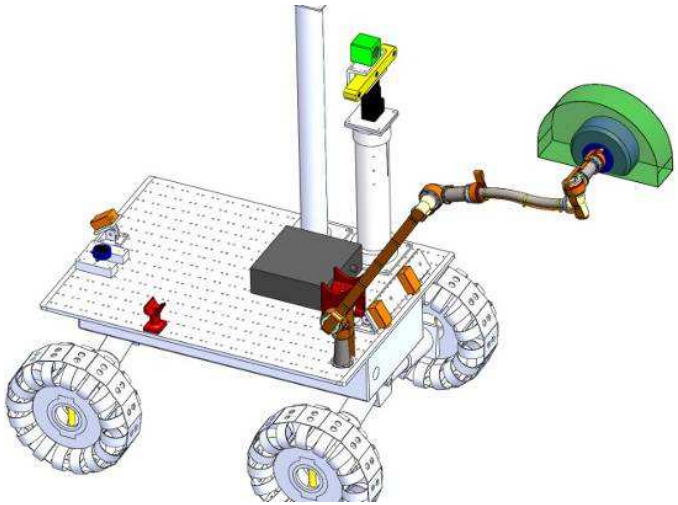

© 2014 Selex ES S.p.A. – All rights reserved

DELIAN Arm development Model (DM)

- A DM of DELIAN arm will be developed and tested in phase 3

− Based on scenario D, although with 6 DoF (enhance versatility as general purpose device)
− Limb reshaping solution => spherical wrist and very high dexterity at the same time
− Partial use of additive manufacturing considered for limbs and interconnecting elements
  − Minimise number of mechanical parts => Save mass and improve mechanical accuracy

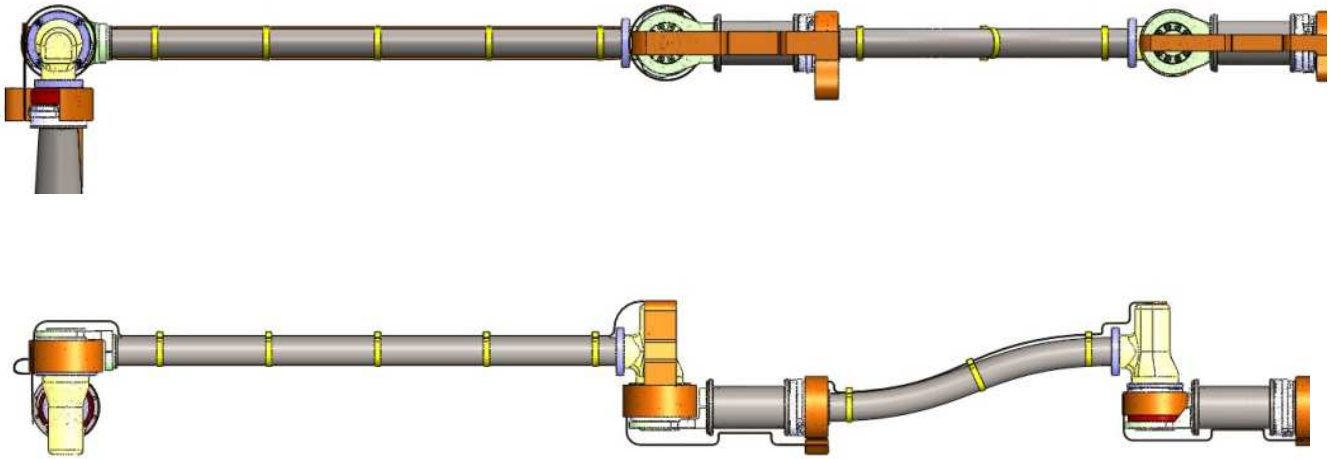

© 2014 Selex ES S.p.A. – All rights reserved

Joint design approach

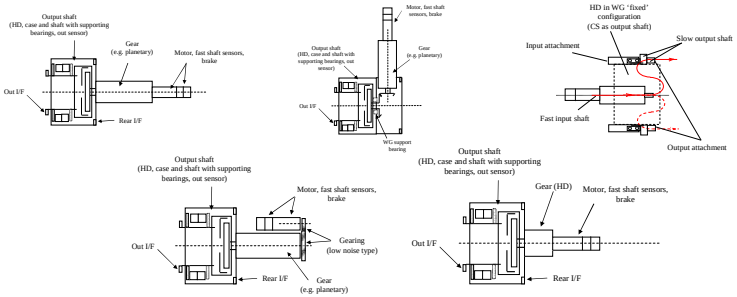

- Trade Off
  - Architectural (straight, tilted, folded, parallel, double HD)
  - Components (motor, sensor, gear)

- Scalability analysis:
  - Select scalable mechanical and electrical elements through the full family while minimising parts, overdesign situation and the related mass penalties
  - Establish scalability rules for DELIAN family estimations (e.g. torque to mass ratio)
    - Best mass to torque ratio achieved with a relatively light motor and high reduction ratio composed of a planetary gear and a Harmonic drive with maximum available reduction ratio
  - Define DELIAN Families of Joints
    - 4 families have been identified

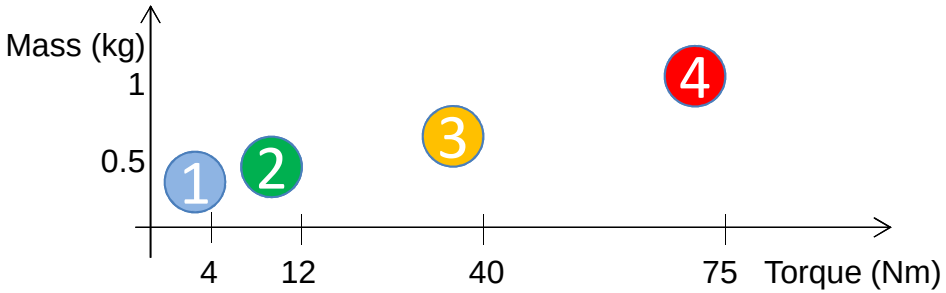

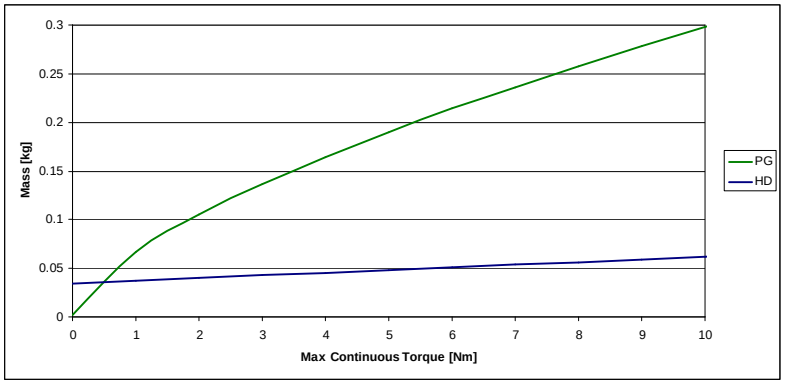

© 2014 Selex ES S.p.A. – All rights reserved

Joint EM overview

- Family #3, straight configuration, consisting of:
  - Motor position sensor (8 count/rev)
  - Brushed DC motor
  - Planetary gear 157:1
  - Harmonic drive gear 120:1
  - Output position sensor (376000 count/rev) with two indexes for motion limits, integrated directly at the output shaft
- Main characteristics:
  - Mass: 0.68 kg
  - Volume: Ø66x105mm (small sensor head Ø74mm)
  - Output sensor resolution of 0.001 deg and accuracy of ±0.003 deg
  - Speed > 0.7 deg/s
  - Torque:
    - 54Nm at ambient
    - at least 38Nm (with ECSS margins) in worst-case operational conditions

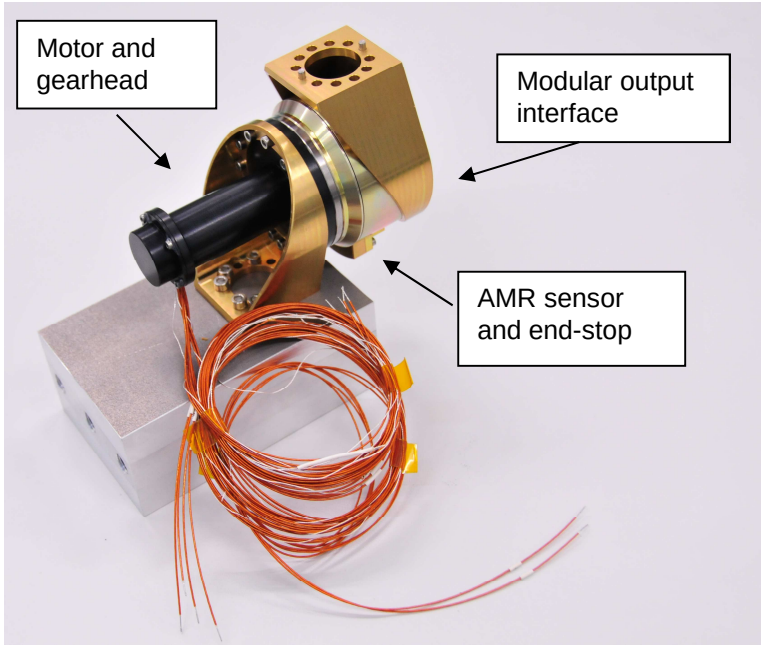

© 2014 Selex ES S.p.A. – All rights reserved

Joint EM initial test results

- Under ambient condition, the 54Nm could be produced when applying 3V and 0.2A at motor level
- Measured joint stiffness is linear and in the order of 10^7 N/m and 10^4 Nm/rad
- Holding torque capability in the order of 20Nm (passive brake needed in the FM)

- First lesson learned:
  - Modifying the input interface of the Harmonic drive to accommodate the planetary gear limits the output torque capability
  - The expected peak torque of 70 Nm at 1-g conditions could not be generated
  - For joints requiring this capability, the original Harmonic drive shall be used, which will cause an increase to joint length

- The joint produced confirms suitability of the design and outstanding capability in term of mass to torque ratio and positioning accuracy

© 2014 Selex ES S.p.A. – All rights reserved

DELIAN control system

- Ground Control Station:

- On-board control system:
  - On Board Computer (OBC) and software
  - Low level motion control electronics

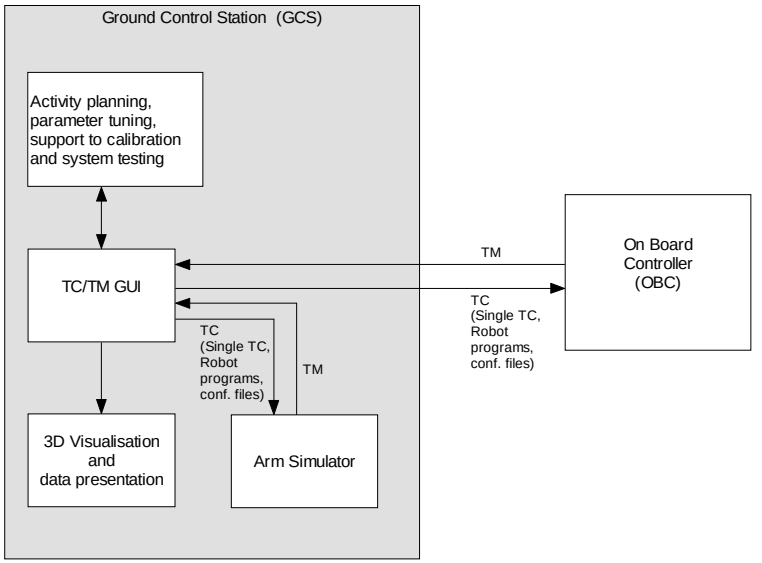

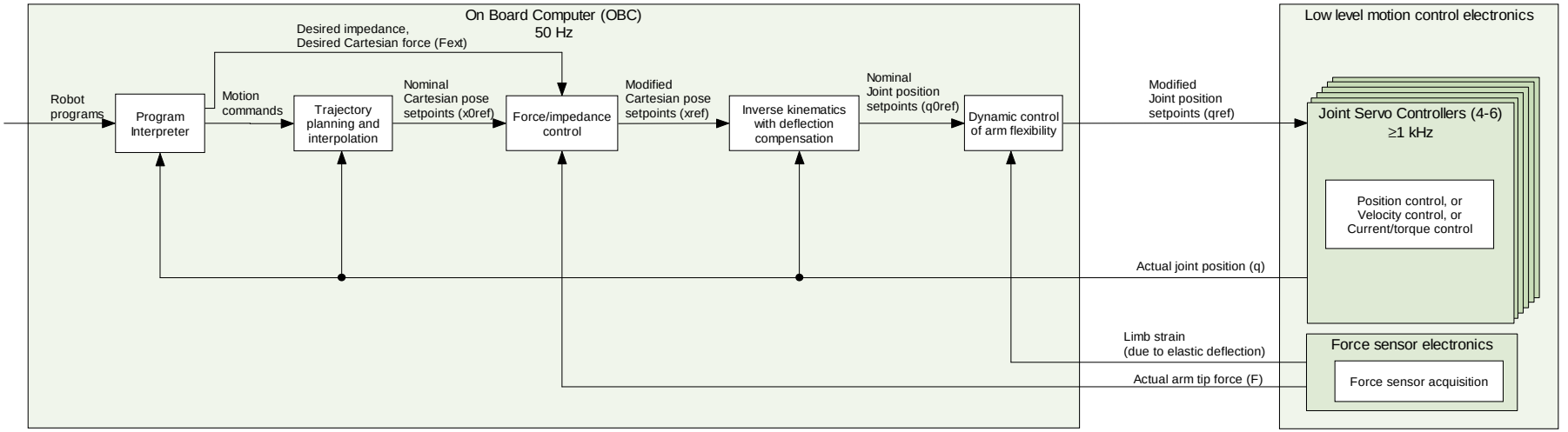

© 2014 Selex ES S.p.A. – All rights reserved

Joint servo control

- Dual-loop cascade control scheme, with an inner motor velocity loop and an outer joint position loop
  - Very good static positioning accuracy due to very accurate output sensor
  - Dynamic positioning performance obtained as a trade-off between torque disturbance compensation and damping of load oscillations

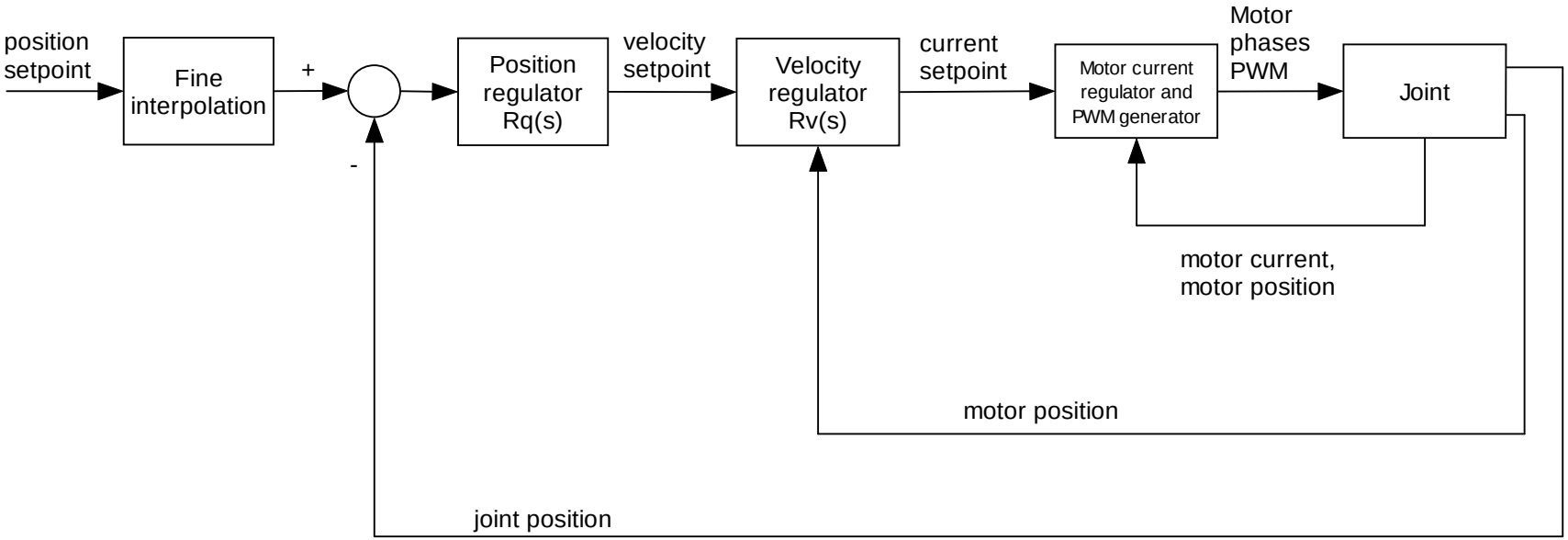

© 2014 Selex ES S.p.A. – All rights reserved

Joint servo control preliminary tuning

- Motor velocity loop only:
  - Motor velocity is well controlled (torque disturbance as ripple and friction are compensated)
  - The load exhibits oscillations, due to joint flexibility
- Outer joint position loop is closed around the inner motor velocity loop:
  - Load oscillation is damped , showing the benefits of the dual-loop scheme

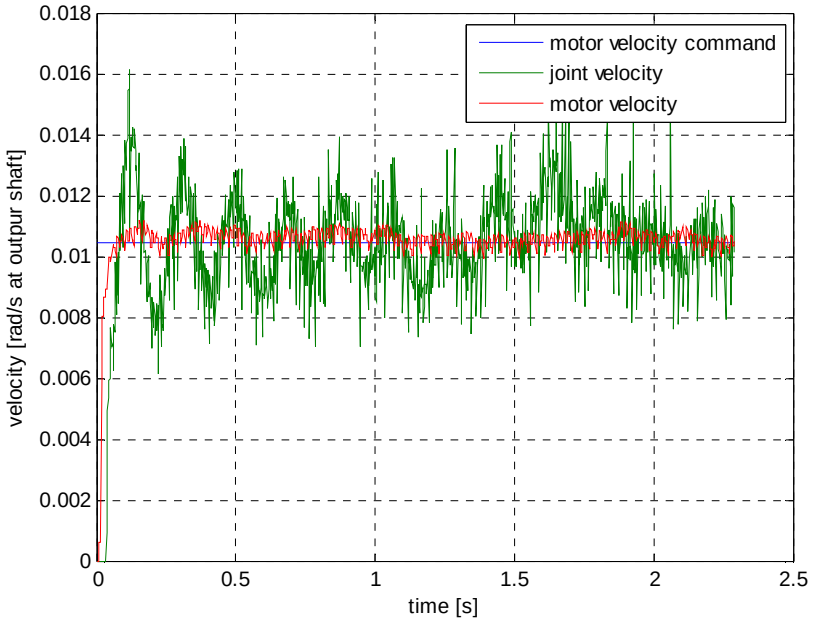

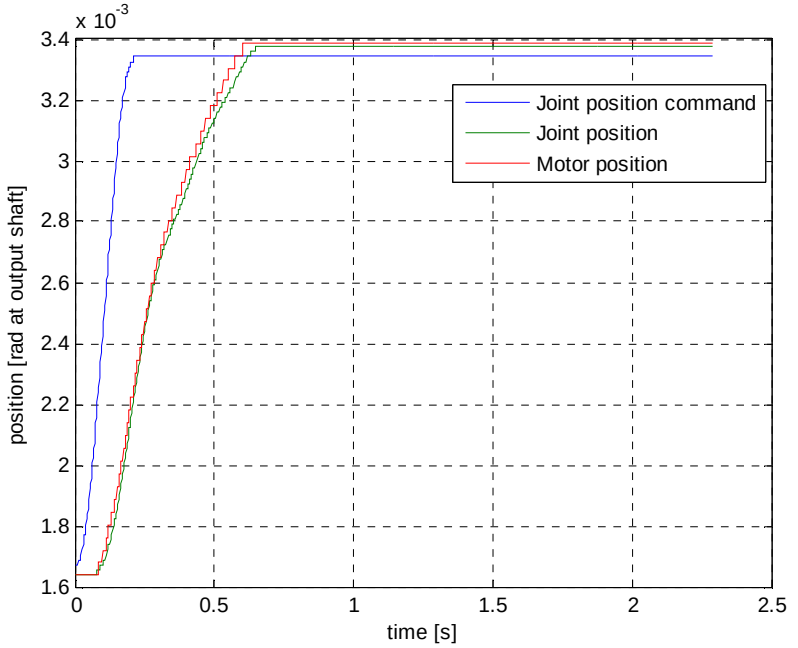

© 2014 Selex ES S.p.A. – All rights reserved

Deflection compensation

- Model based deflection compensation studied for DELIAN
- Two possible solutions:

− An off-line correction of the commanded pose (a fake-pose-like method)

− An on-line integration of deflection compensation and inverse kinematics (shown in the figure)

  − Requires more computing power but should improve positioning accuracy also along the path

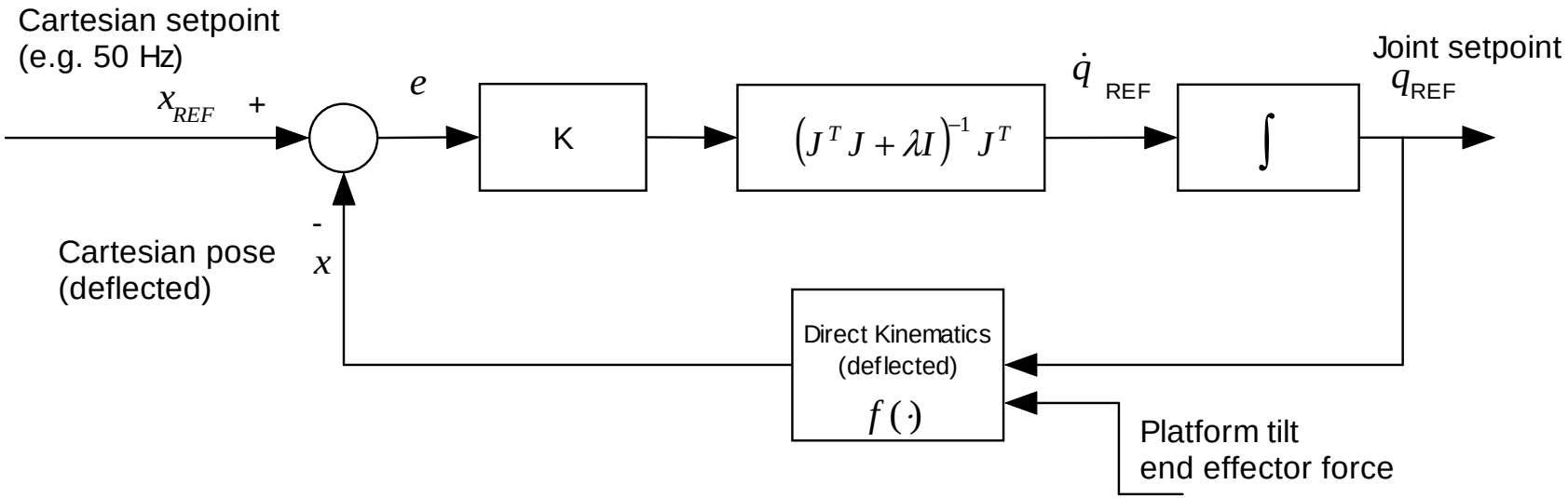

© 2014 Selex ES S.p.A. – All rights reserved

Dynamic control of arm flexibility

- Long slender arms (e.g. scenario B) could exhibit dynamic vibrations induced by flexible modes
- A possible method for active control of flexible modes is Wave Based Control (UCD)

- The motion induced by the actuator into the flexible system is the sum of two components: an outgoing and a returning wave

- Identify the returning wave (e.g. by measuring it at the interface) and move the actuator to “absorb” (cancelling) the returning motion, thereby actively damping the vibration

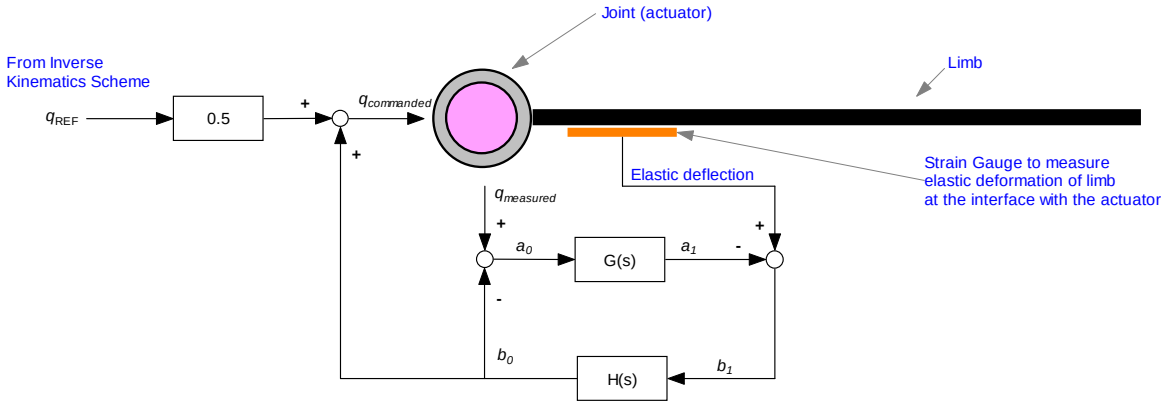

G(s), H(s): Wave Transfer Function
a_0, a_1 : Outgoing Waves
b_0, b_1 : Returning Waves
q_{REF} : Reference motion of the joint, output of the kinematic inversion scheme
$q_{commanded}$: Reference motion of the joint modified by the Wave Based Control Scheme, given as input to the joint motion controller

© 2014 Selex ES S.p.A. – All rights reserved

Conclusion

- Overview of DELIAN project phases 1 and 2, showing:

− System design process and the main results achieved (reference robot arm concepts for each analysed mission scenario)

− The development of a compact and lightweight joint, selected among the identified joint families which will be used as building blocks for the arm

− Control design aspects, including specific ideas for controlling a lightweight flexible robot arm as DELIAN, both at joint servo level and arm Cartesian level

- Next scheduled activities:

− Completion of phase 2: joint testing in environmental conditions

− Phase 3: detailed design, development and testing of a full robot arm (DELIAN DM)

© 2014 Selex ES S.p.A. – All rights reserved

THANK **YOU** FOR YOUR ATTENTION

Andrea Rusconi, Selex ES
Piergiovanni Magnani, Selex ES
Stéphane Michaud, RUAG Space
Gabriel Gruener, CSEM
Grégoire Terrien, BlueBotics SA
Andrea Merlo, Thales Alenia Space Italy

Selex ES

Address or e-mail reference

150 YEARS OF TECHNOLOGY