Development of an Integrated Design and Simulation Environment for Concurrent Base-Arm Motion Control of Space Manipulators

Zheng Zhong[1]

M. Reza Emami[1,2]

Professor, Chair of Onboard Space Systems

[1]*Institute for Aerospace Studies, University of Toronto, Canada*

[2]*Division of Space Technology, Luleå University of Technology, Sweden*

ASTRA 2015 – ESA/ESTEC

May 12, 2015

Institute for Aerospace Studies
UNIVERSITY OF TORONTO

LULEÅ UNIVERSITY OF TECHNOLOGY

Outline

- Introduction
- Hardware Platform
- Software Platform
- Integrated Design and Simulation Environment
- Experiment Design
- Case Study
- Conclusions

1. Introduction

- Close to 1500 active (man-made) satellites are currently orbiting the Earth (NORAD Catalog).
- Nearly 300 new satellites were sent into the orbit in 2014.
- Typical lifetime of a satellite is between 5–10 years. During this time, the satellite can experience malfunctions such as:
  - Failure to deploy mechanisms
  - Component degradation
  - Premature depletion of fuel supply

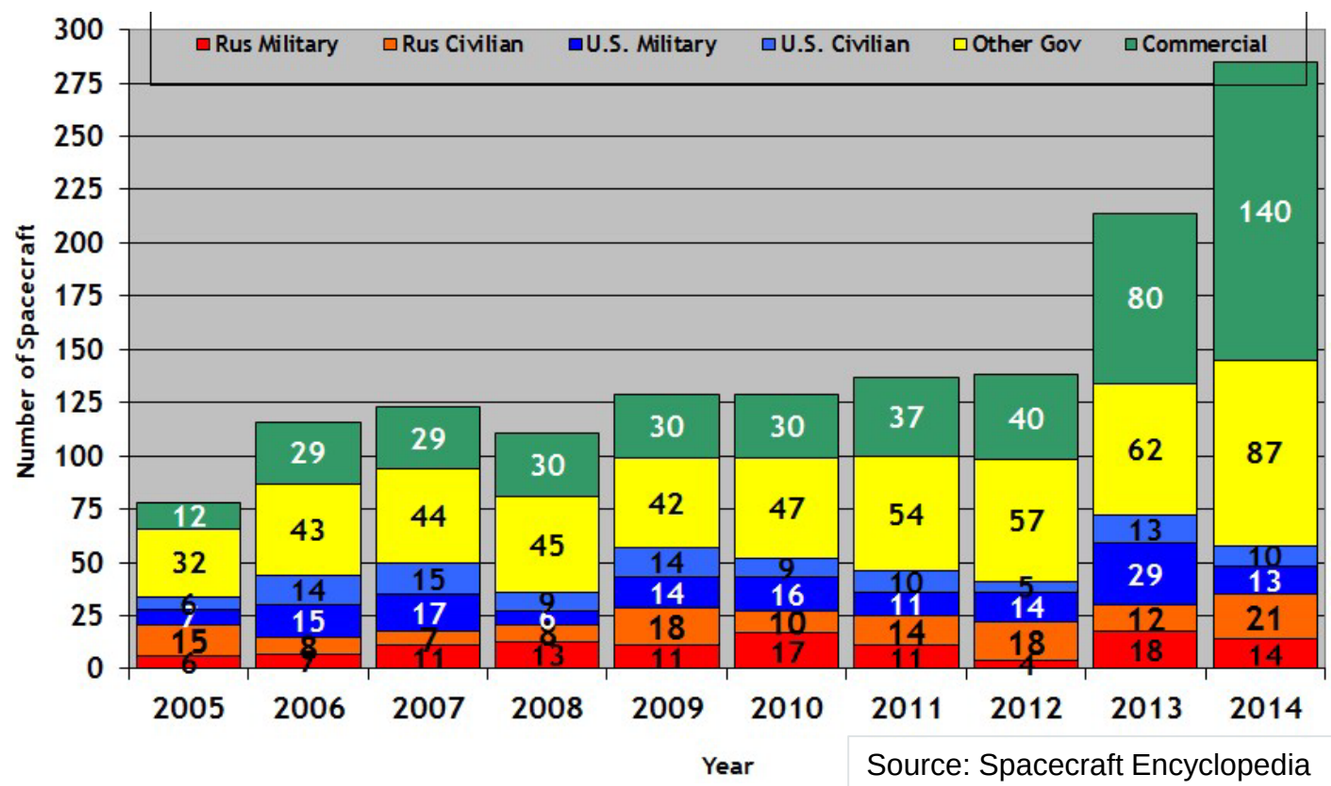

Source: Spacecraft Encyclopedia

1. Introduction: Space Manipulators

- Currently used for inspecting, maintaining and upgrading International Space Station (Canadarm2-Dextre)

1. Introduction: Space Manipulators

- In future, easily deployable robotic systems are needed, consisting of a base (spacecraft) and a robotic manipulator, to perform servicing tasks such as:

  - Inspection
  - Repair and Refuel
  - Debris Removal

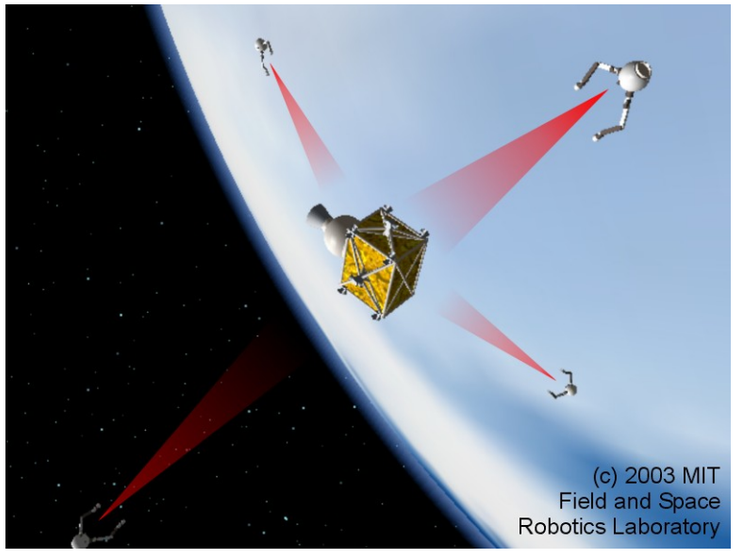

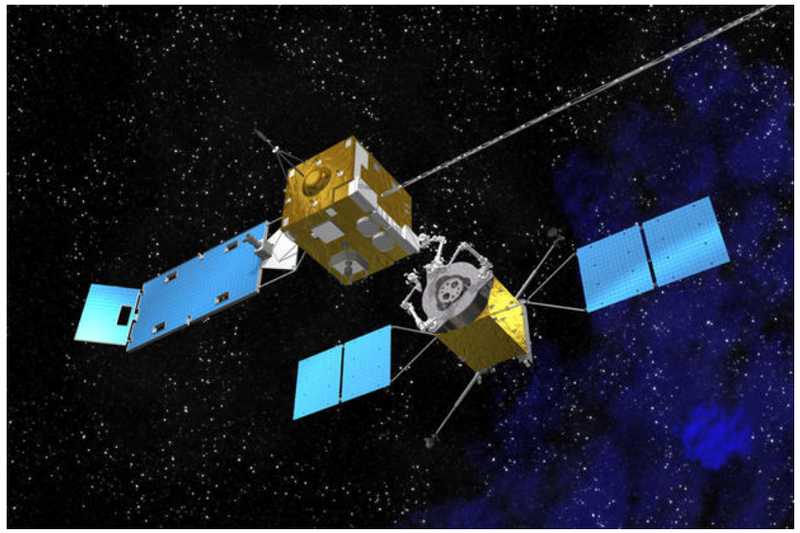

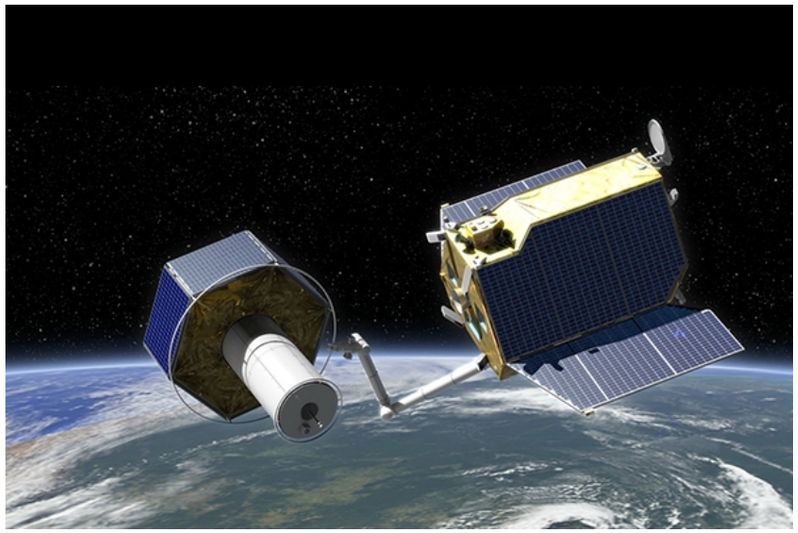

1. Introduction: Space Manipulators

- Future space manipulators behave as free-floating (or free-flying) multi-body systems:
  - Difficult to control due to the base reacting to manipulator motion
  - Difficult to test on Earth due to gravitational effects

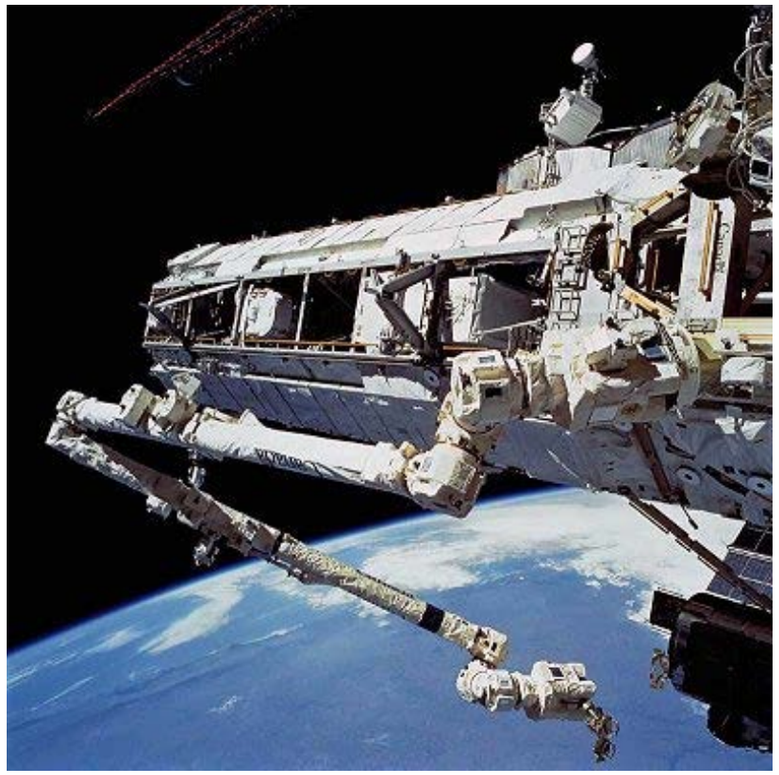

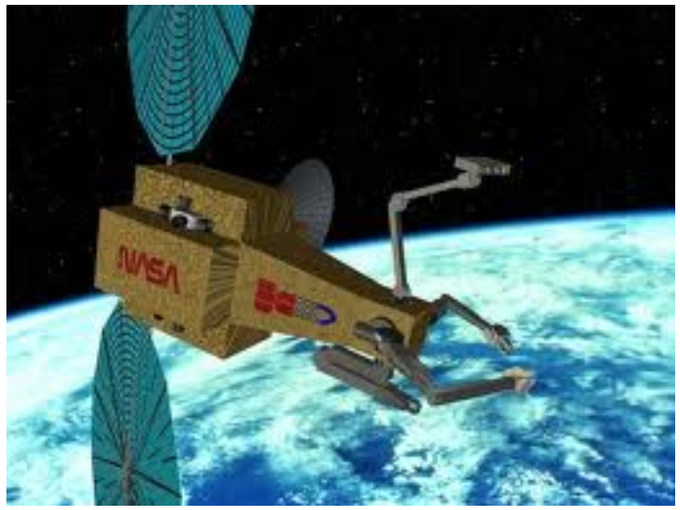

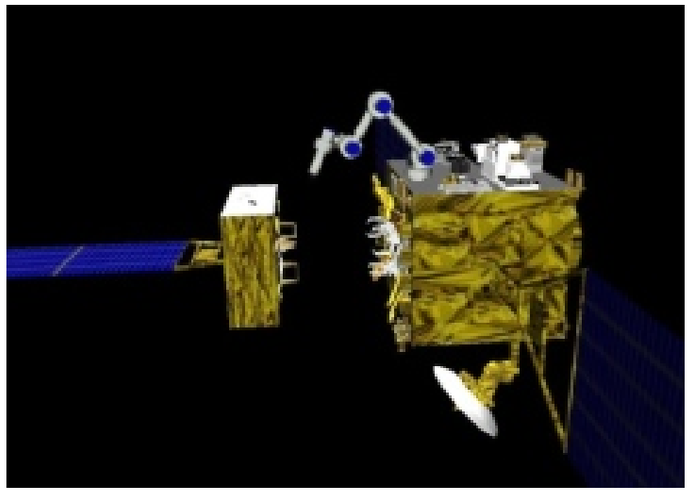

1. Introduction: Experimental Platforms

- Several methods of simulating micro-gravity conditions of space environment have been developed:
  - Neutral Buoyancy
    - Fluid damping and inertia

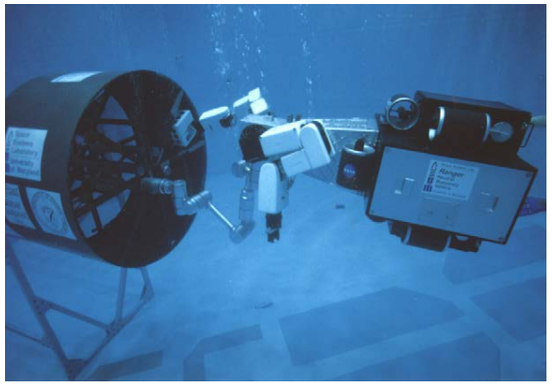

  - Parabolic Flight
    - High cost and short experiment duration

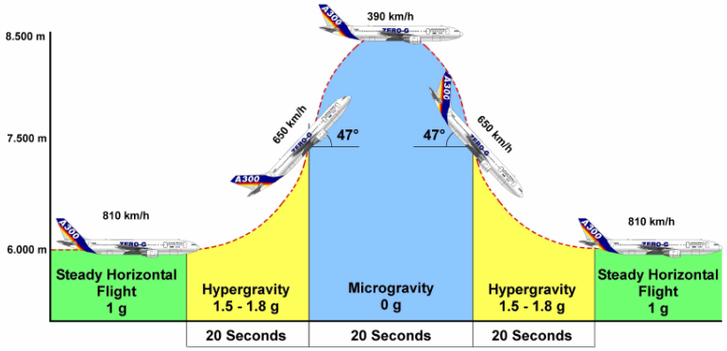

  - Suspension System
    - Suspension system dynamics and friction

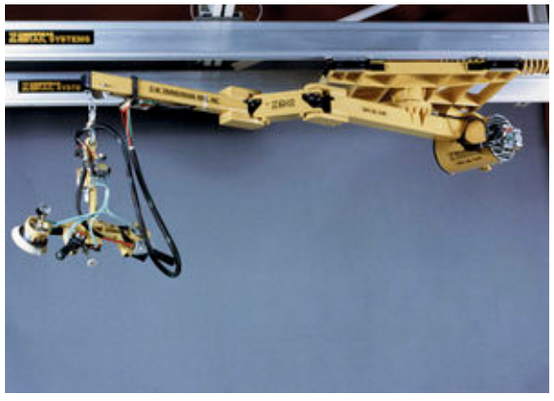

  - Manipulator Emulation
    - Complex mechanism and controller

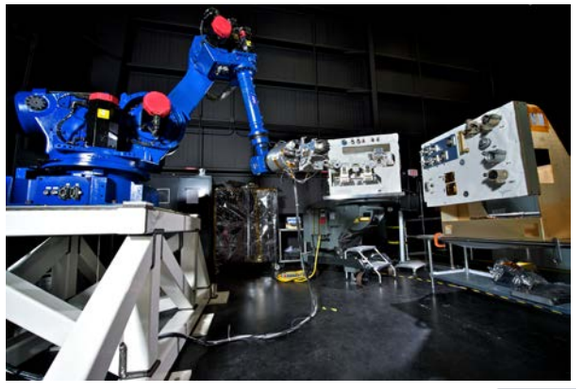

1. Introduction: Air-Bearing Table

- The air-bearing table is a suitable method for testing motion control schemes for space manipulators
  - Negligible dynamic influence from air-bearing
  - Minimal friction
  - Simple construction
  - Low experiment cost

- Existing air-bearing table systems are limited to specific sets of experiments

- Motion control schemes are studied under vastly different test scenarios and are difficult to compare

1. Introduction: Objectives

- Development of versatile air-bearing table platform that can perform different manipulator motion control experiments such as:
  - Planar/spatial arm control (free base)
  - Base control (manipulator actuated)
  - Concurrent base-arm control

- Development of an Integrated Design and Simulation Environment (IDSE):
  - Implement, verify, and optimize different trajectory planning and motion control schemes in virtual reality simulations
  - Apply various control schemes to the hardware platform for comparative studies

2. Hardware Platform

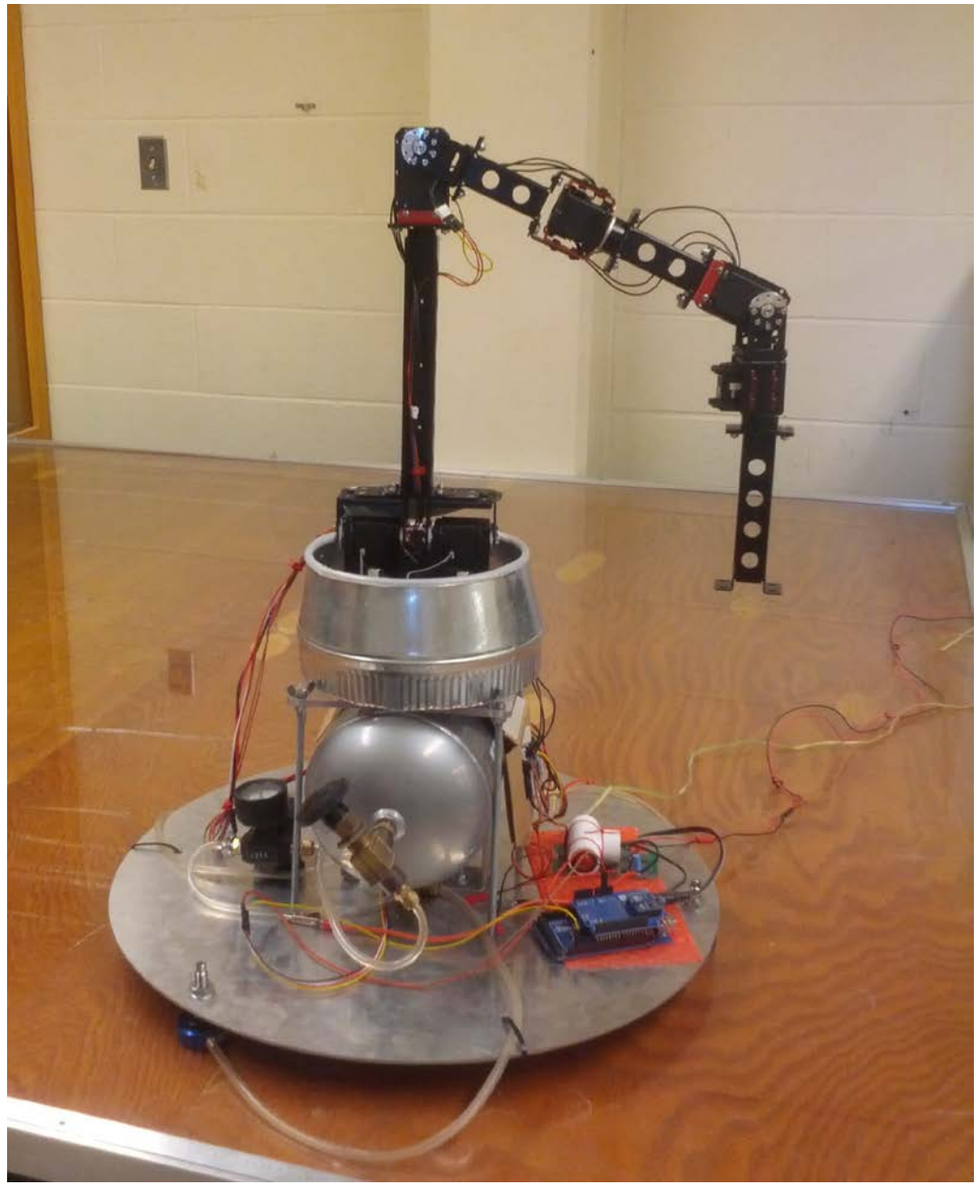

2. Hardware Platform: Manipulator

- Manipulator characteristics:
  - 6 actuated joints for spatial manipulation and concurrent base-arm motion control
  - Modular
  - Reconfigurable
  - Light and Cheap (COTS)

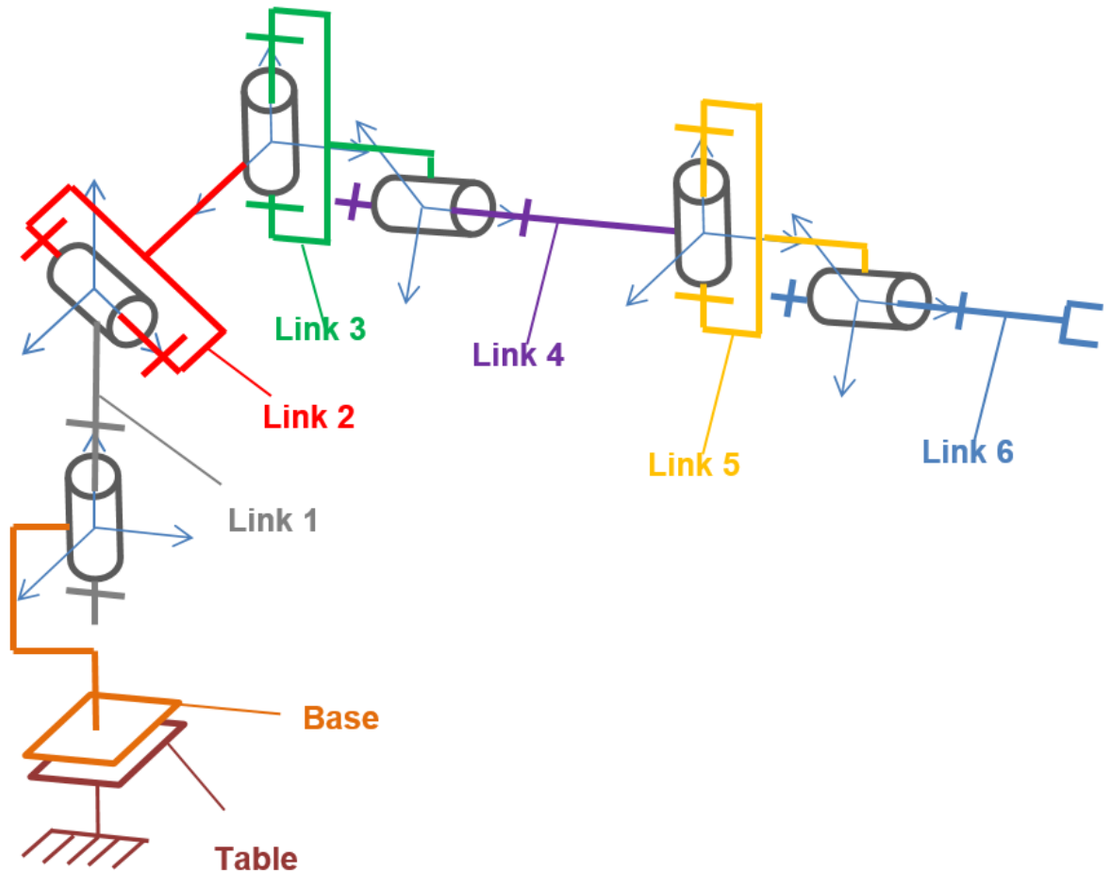

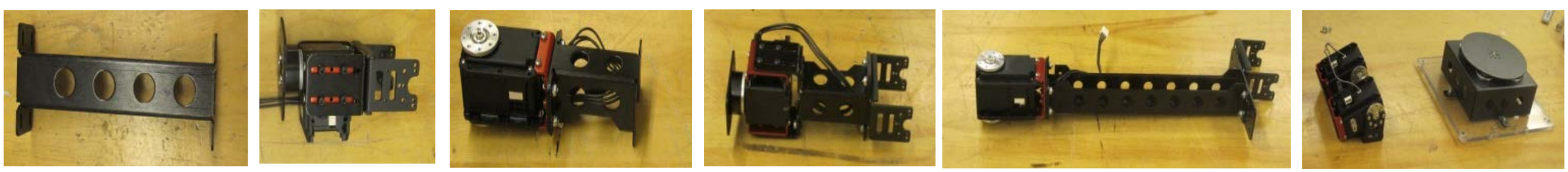

Link6	Link5	Link4	Link3	Link2	Link1

2. Hardware Platform: Base

- Circular chassis with wide air-bearing footprint for stability
- Air tank capacity sufficient for up to 2 minutes of experiment
- 2×2 m^2 glass table allows for test scenarios with large base translation

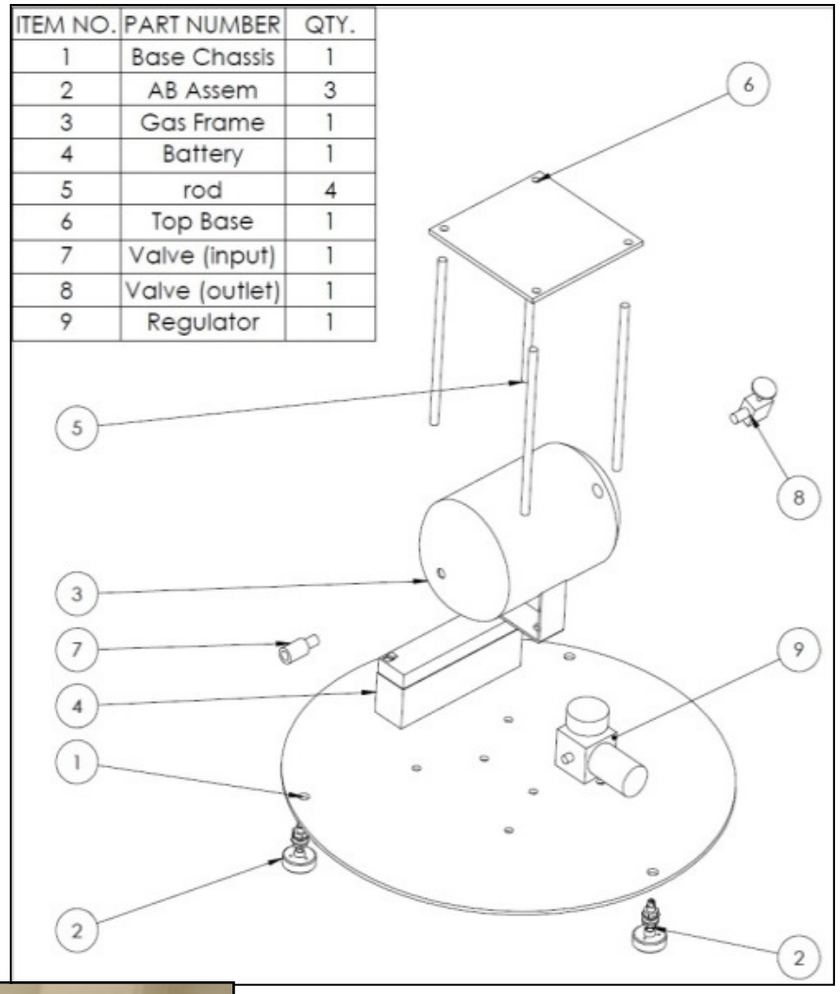

ITEM NO.	PART NUMBER	QTY.
1	Base Chassis	1
2	AB Assem	3
3	Gas Frame	1
4	Battery	1
5	rod	4
6	Top Base	1
7	Valve (input)	1
8	Valve (outlet)	1
9	Regulator	1

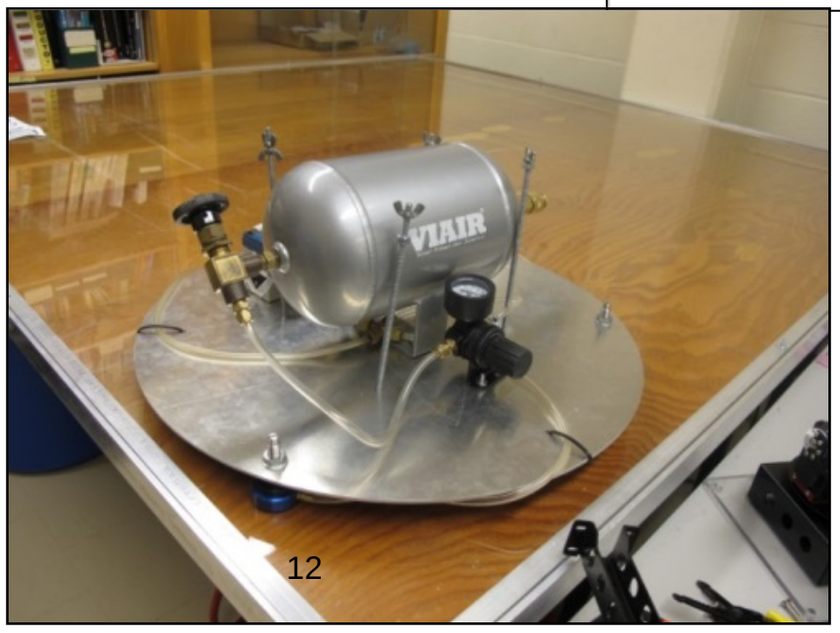

Institute for Aerospace Studies
UNIVERSITY OF TORONTO

LULEÅ UNIVERSITY OF TECHNOLOGY

2. Hardware Platform: Manipulator Properties

- Allows for large manipulator motions according to the Dynamically Equivalent Manipulator (DEM) concept

- Geometric and dynamic parameters were designed to properly position and motion of the system center of mass

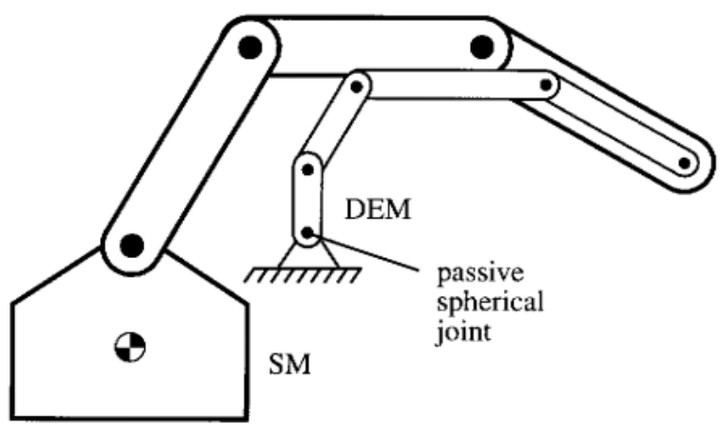

Parameter	Symbol	Value
Base mass	m_0	8.4 kg
Link 1 length	l_1	0.058 m
Link 1 mass	m_1	0.374 kg
Link 1 mass ratio	m_1/m_0	0.044
Link 2 length	l_2	0.307 m
Link 2 mass	m_2	0.504 kg
Link 2 mass ratio	m_2/m_0	0.060
Link 3 length	l_3	0.152 m
Link 3 mass	m_3	0.412 kg
Link 3 mass ratio	m_3/m_0	0.049
Link 4 length	l_4	0.135 m
Link 4 mass	m_4	0.341 kg
Link 4 mass ratio	m_4/m_0	0.041
Link 5 length	l_5	0.079 m
Link 5 mass	m_5	0.161 kg
Link 5 mass ratio	m_5/m_0	0.019
Link 6 length	l_6	0.142 m
Link 6 mass	m_6	0.342 kg
Link 6 mass ratio	m_6/m_0	0.041

2. Hardware Platform: Onboard Instruments

- Actuation
  - MX-T servomotors driven by:
    - Current/torque input
    - Position input via internal PID
- Measurements
  - Absolute encoders
  - ArduIMU inertial measurement unit (IMU)
- Communication
  - CM-700 Motor controller
  - Arduino

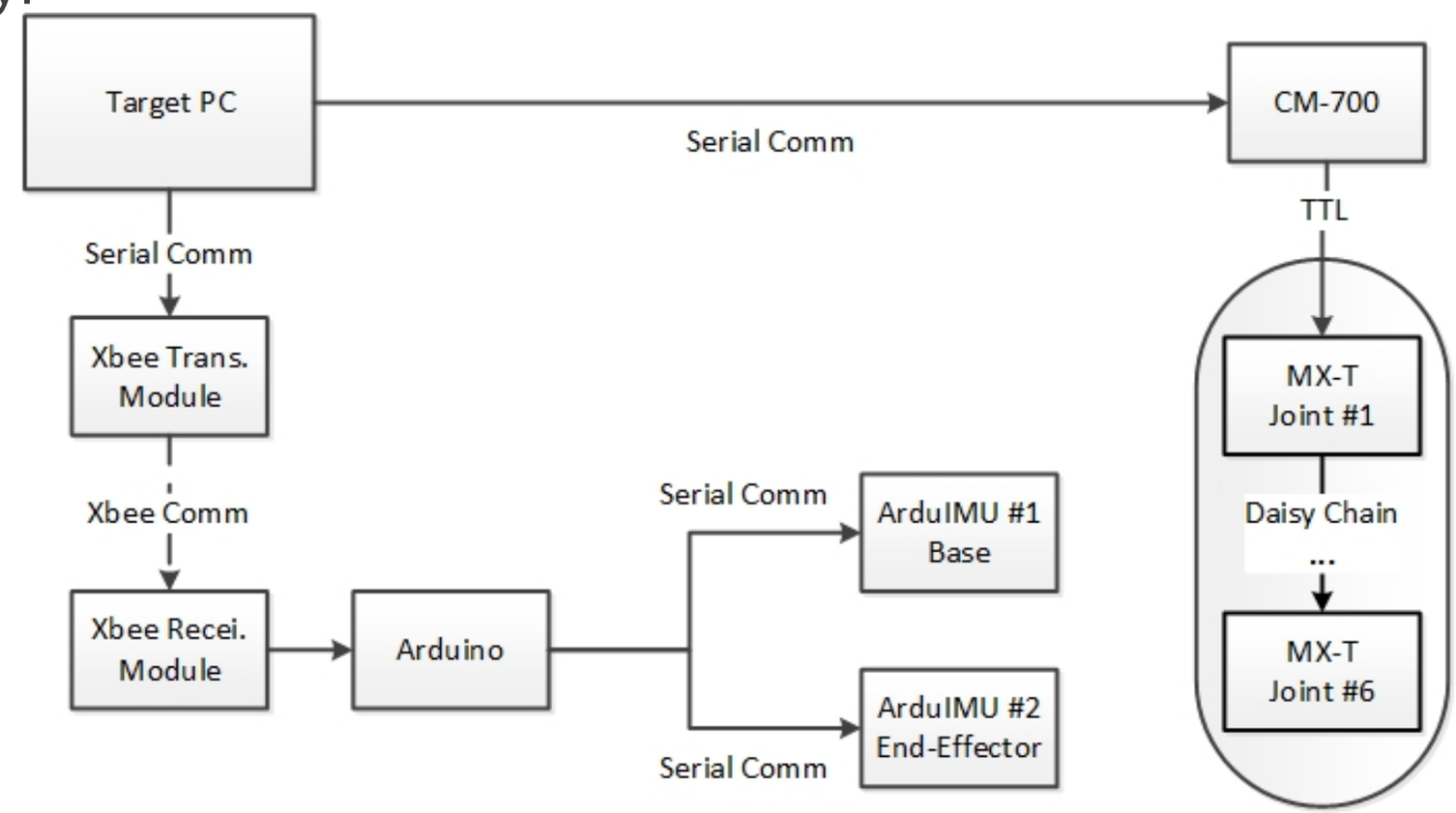

2. Hardware Platform: Visual Positioning

- Kinect® module is used to track locations base and end-effector
- Dark green visual mark is selected to be distinguished from the red color of the test-bed
- Color matching and blob detection are used to locate the marks in the world frame
- IR depth sensor provide height measurements of the mark location

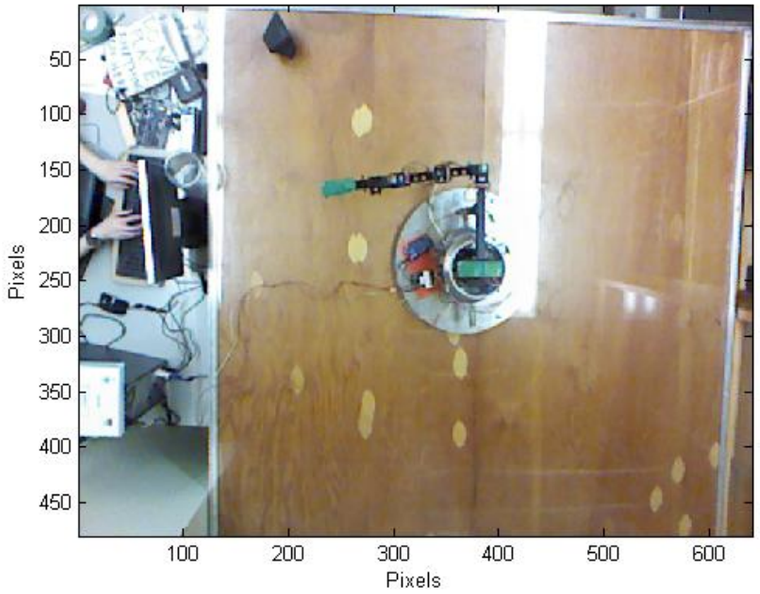

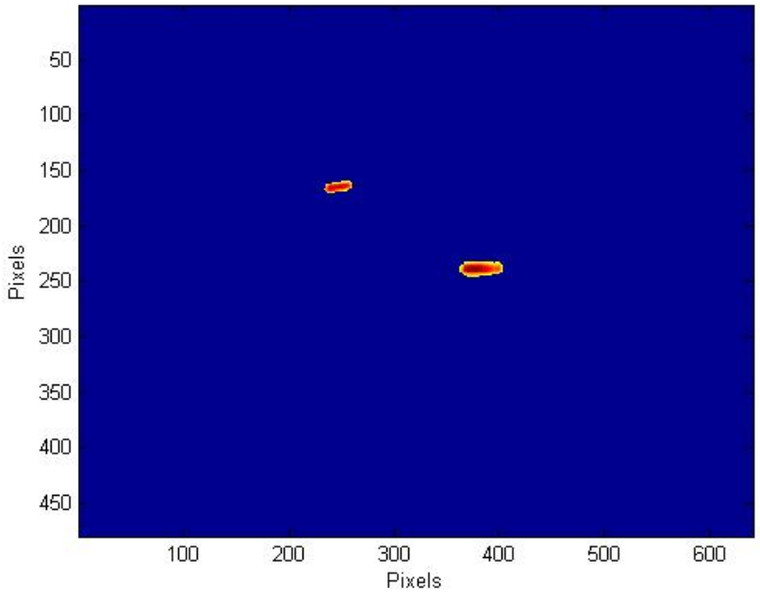

3. Software Platform: Physical Model

- CAD Drawing of each individual component is created in SolidWorks®
- Modules are assembled from components
- Dynamic properties are computed in SolidWorks®
- Complete model is imported into SimMechanics™ (and SimElectronics™)

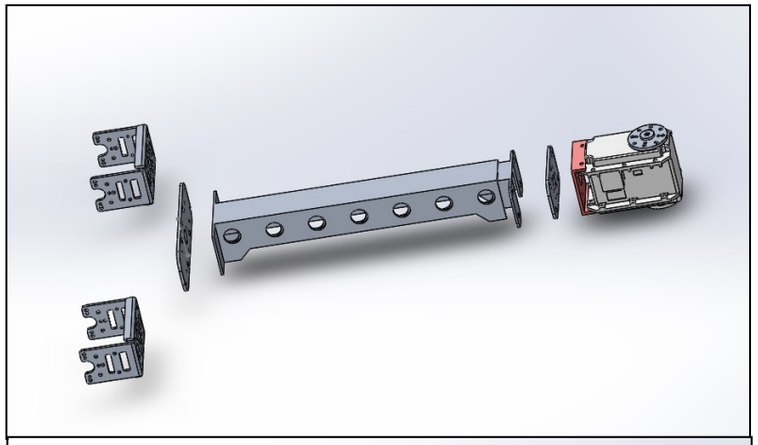

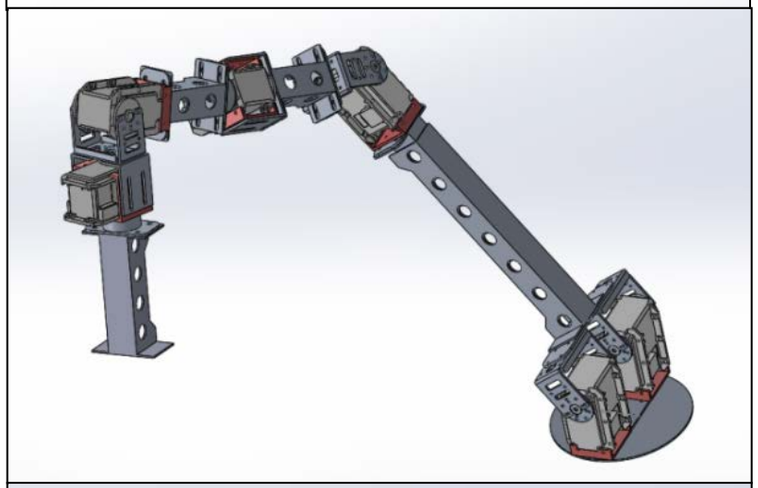

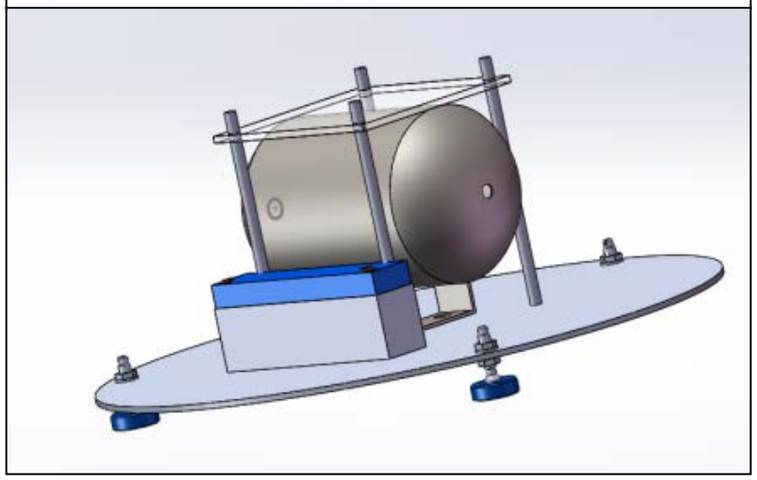

3. Software Platform: Actuators

- Servomotor dynamics are modeled in Simulink™ to include:
  - Back Emf
  - Rotor Damping
  - Rotor Inertia
  - Gear ratio

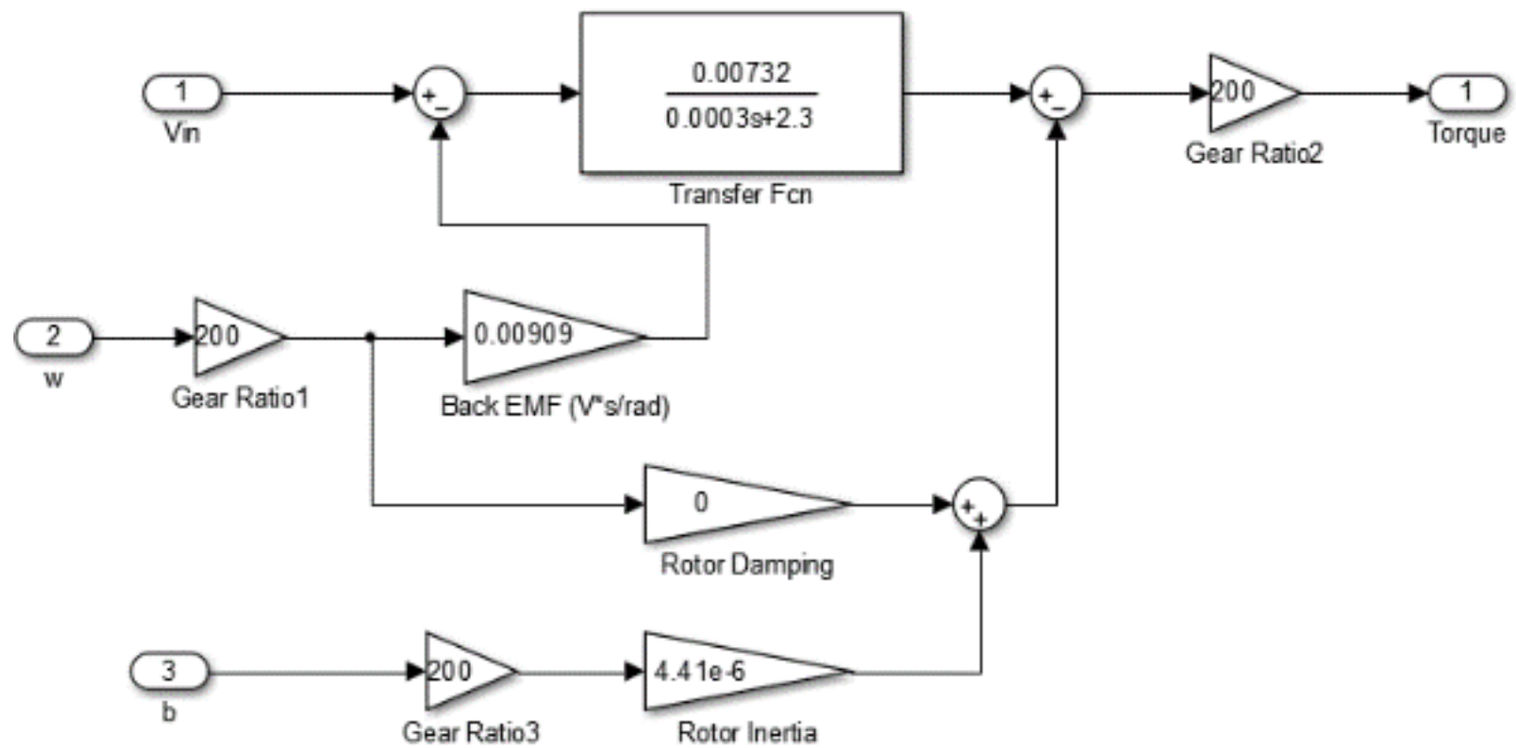

- Model used to design and optimize PID gains for the servomotors

4. Integrated Design and Simulation Environment

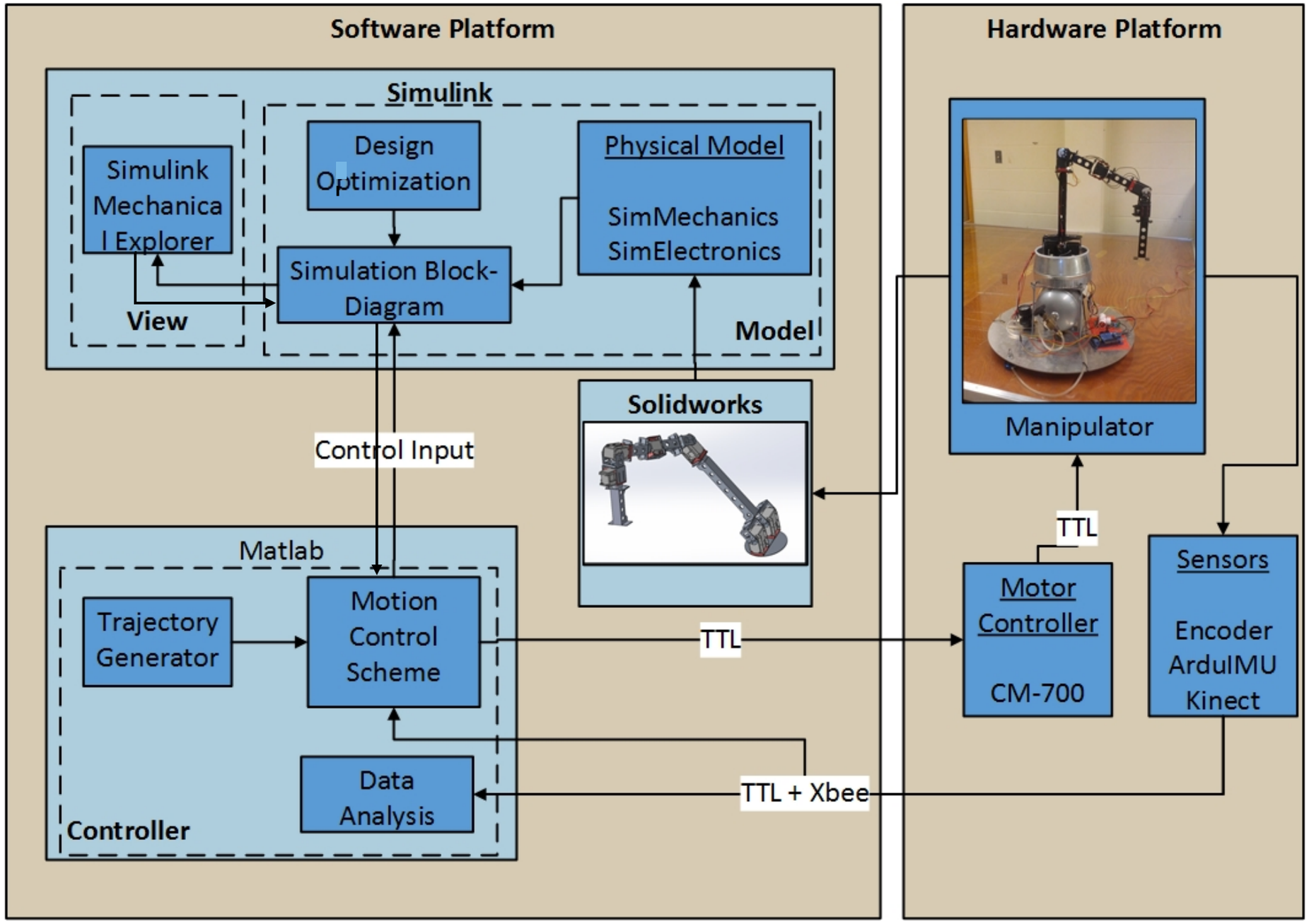

4. IDSE: Design Process

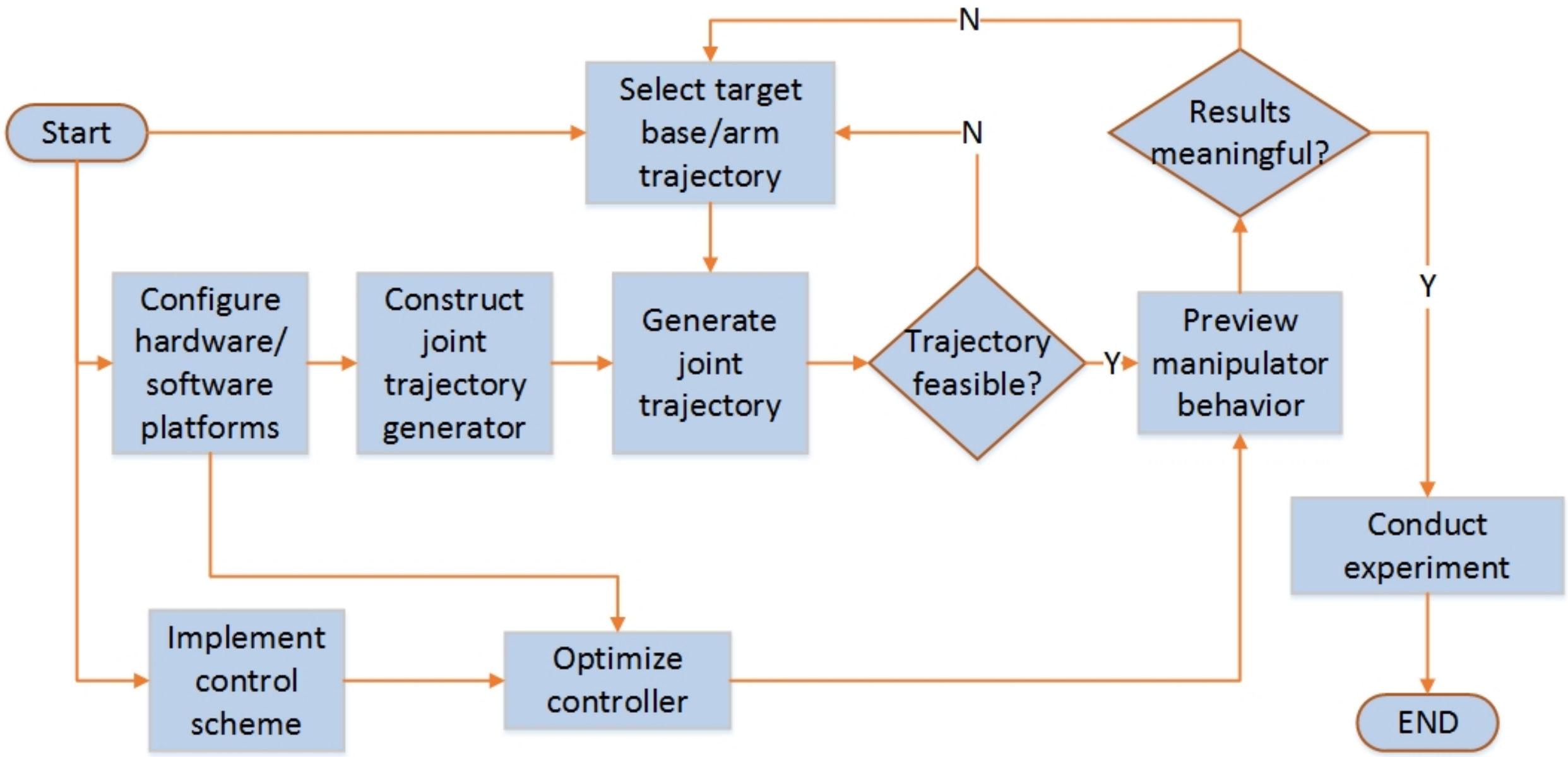

4. IDSE: Trajectory Generator

- For an end-effector trajectory, the joint trajectory can be computed from the kinematic equations using the Generalized Jacobian Matrix (GJM):

$$\dot{q}_m = J^e(q_b, q_m)^{-1} \begin{bmatrix} v_e \\ \omega_e \end{bmatrix}, \tag{1}$$

$$J^e(q_b, q_m) = \begin{bmatrix} J_t^e \\ J_r^e \end{bmatrix} = \begin{bmatrix} J_{mt}^e \\ J_{mr}^e \end{bmatrix} - \begin{bmatrix} J_{bt}^e \\ J_{br}^e \end{bmatrix} M_b^{-1} M_m, \tag{2}$$

- The rotation of the base can be obtained from momentum conservation equations:

$$\begin{bmatrix} \omega_{bx} \\ \omega_{by} \\ \omega_{bz} \end{bmatrix} = \begin{bmatrix} -\left(M_b^{-1} M_m\right)_x \\ -\left(M_b^{-1} M_m\right)_y \\ -\left(M_b^{-1} M_m\right)_z \end{bmatrix} \begin{bmatrix} \dot{q}_{m1} \\ \dot{q}_{m2} \\ \vdots \\ \dot{q}_{m6} \end{bmatrix}, \tag{3}$$

4. IDSE: Trajectory Generator

- In the case of concurrent base-arm motion control, the kinematic equations become:

$$\begin{bmatrix} \dot{q}_{m1} \\ \dot{q}_{m2} \\ \vdots \\ \dot{q}_{m6} \end{bmatrix} = \begin{bmatrix} J^e_{mtx} - J^e_{btx} M_b^{-1} M_m \\ J^e_{mty} - J^e_{bty} M_b^{-1} M_m \\ J^e_{mtz} - J^e_{btz} M_b^{-1} M_m \\ J^0_{tx} \\ J^0_{ty} \\ \left[-M_b^{-1} M_m\right]_z \end{bmatrix}^{-1} \begin{bmatrix} v_{ex} \\ v_{ey} \\ v_{ez} \\ v_{bx} \\ v_{by} \\ \omega_{bz} \end{bmatrix}, \qquad (4)$$

5. Experiment Design

- How to simulate 3-D base motion using a planar test setup?
- How to select suitable trajectories to test various control tasks?
- How to define, measure, and compare important performance metrics?
- How to ensure that:
  - Manipulator's estimated geometric/dynamic properties are sufficiently accurate?
  - Hardware is capable of implementing different control schemes?
  - Simulation and experiment results are comparable?

5. Experiment Design

- Some trajectory selection considerations include:
  - Large end-effector motions to distinguish tracking error from measurement error
  - Trajectories that greatly disturb an uncontrolled base to test zero-disturbance control

- Performance criteria need to be quantified for analysis and comparison using methods such as *t*-statistics

$$t = \frac{|\bar{y}_A - \bar{y}_B| - \delta}{\sigma \cdot \sqrt{\frac{1}{n_A} + \frac{1}{n_B}}}, \qquad (5)$$

- Further experiment design to be conducted to overcome the planar base limitation of the air-bearing table

6. Case Study

- PID joint controllers are used to track a horizontal XY trajectory of end-effector point
- Manipulator is locked in a planar configuration
- A feasible straight line trajectory is selected to be the reference
- PID gains are optimized using Simulink™ PID Tuner and loaded directly onto the servomotors
- No feedback of end-effector point position

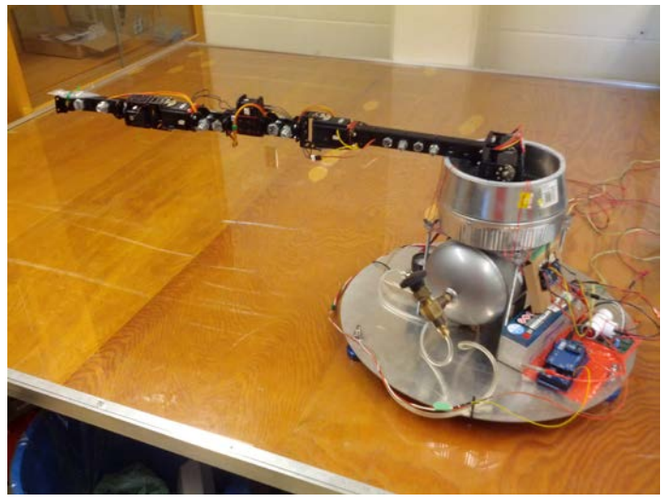

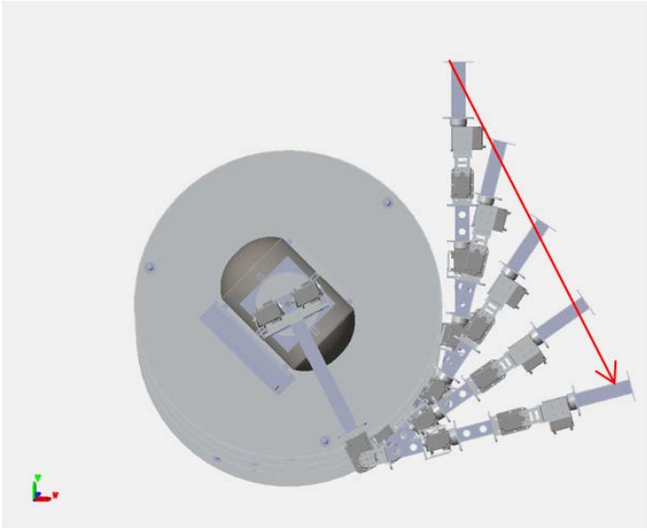

6. Case Study

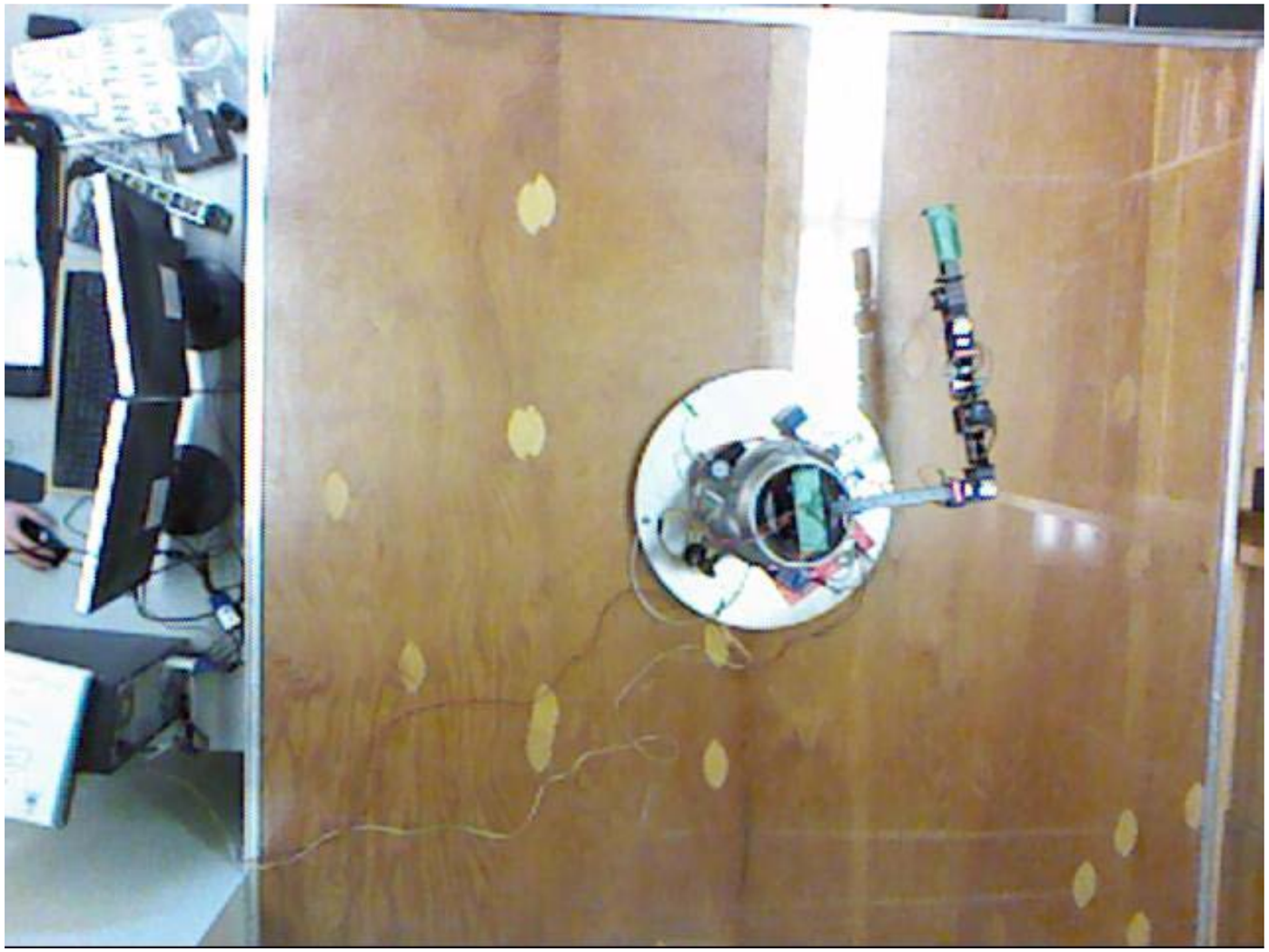

6. Case Study: Results

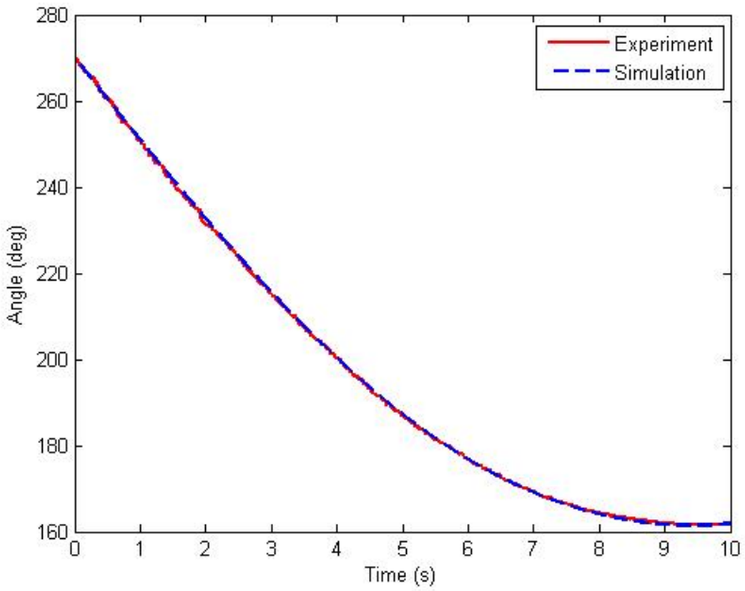

Joint 1 Displacement

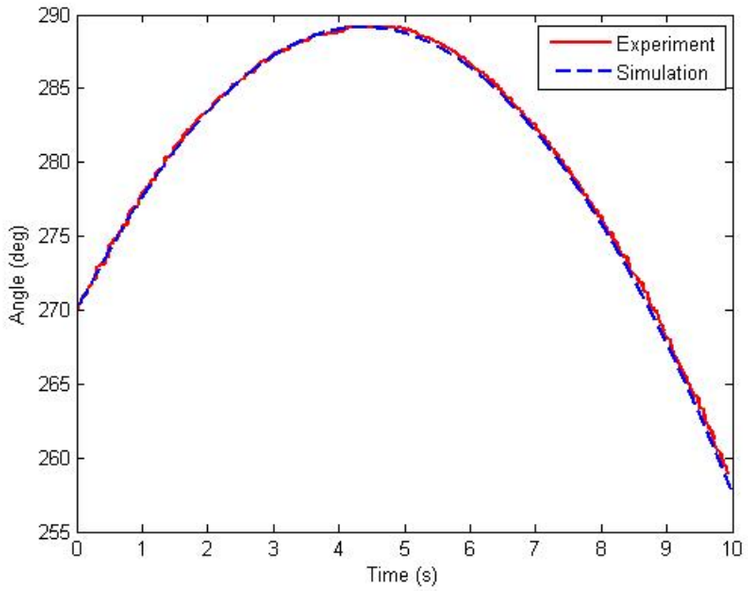

Joint 2 Displacement

	$\bar{y}_A$	σ	t
Joint 1	0.154 deg	0.42	1.27
Joint 2	-0.181 deg	0.23	0.53

- Using *t*-statistic with 90% confidence level, it is shown that joint displacements of the experiment and simulation are statistically identical

6. Case Study: Results

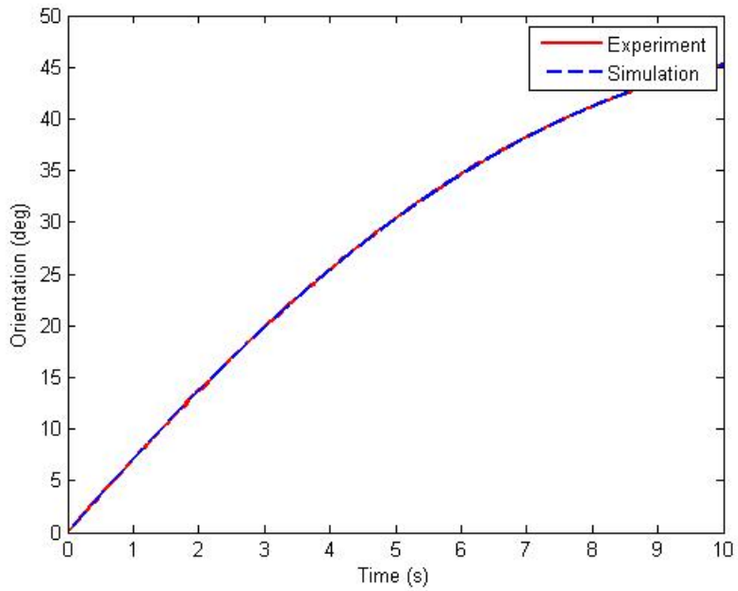

Base orientation

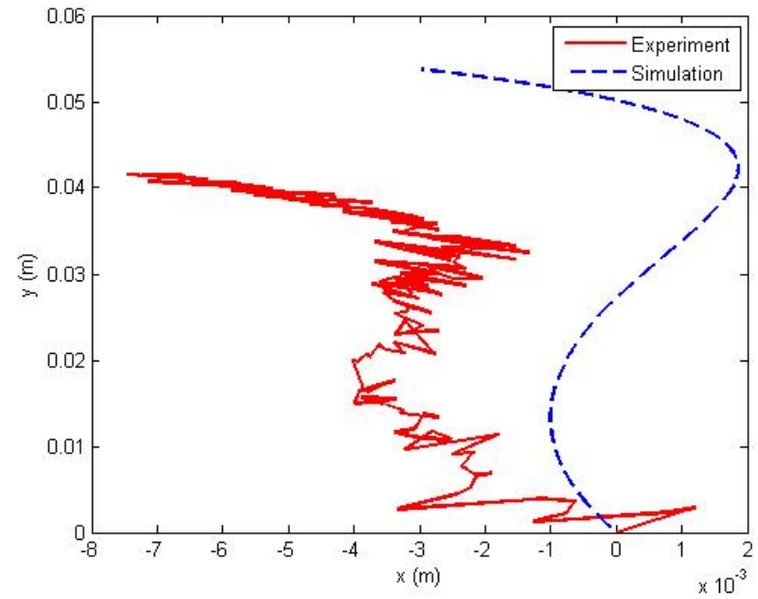

Base position

			t
Base Orientation	0.155 deg	0.092	0.65
Base X	3.5 mm	2.9	3.97
Base Y	6.9 mm	8.5	2.22

- The base orientation from experiment and simulation are statistically identical. Simulation error for base position has a mean of 5.2mm and standard deviation of 8.9 mm

6. Case Study: Results

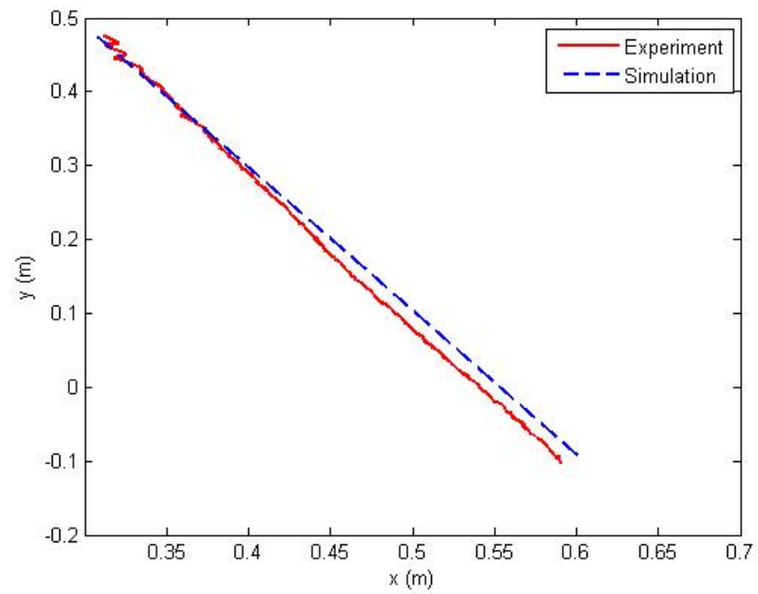

End-effector point position

	$\bar{y}_A$	σ	t
End-effector X	3.8 mm	11	1.74
End-effector Y	22 mm	8.0	8.69

- Simulation error for end-effector point position has a mean of 13 mm and standard deviation of 14 mm

7. Conclusion

- A versatile air-bearing table hardware platform for testing space manipulators is presented. This hardware platform features:
  - Sufficient actuation for spatial and/or concurrent base-arm motion control
  - Large end-effector motion and base rotation, with limited base translation

- The integrated design and simulation environment (IDSE) for the hardware platform is developed and used to
  - Generate joint trajectories from end-effector/base trajectories
  - Design and optimize controllers for hardware and software platforms
  - Study manipulator behavior in simulation and experiment concurrently

- The platform is ready for the experiment design phase and comparative studies

Thank You!

Questions?

Institute for Aerospace Studies
UNIVERSITY OF TORONTO

LULEÅ UNIVERSITY OF TECHNOLOGY