Gerrit Hausmann[1], Matthias Wieser[1], Richard Haarmann[1], André Brito[1], Jan-Christian Meyer[1], Steffen Jäkel[2], Michèle Lavagna[3], Björn Jakobsson[4], Robin Biesbroek[5]

(1) OHB System AG
(2) DLR Robotics and Mechatronics Center
(3) Politecnico di Milano, Department of Aerospace & Science
(4) OHB Sweden AB
(5) ESA ESTEC

SPACE SYSTEMS

e.Deorbit Mission: OHB Debris Removal Concepts

We. Create. Space.

The Space Debris Problem

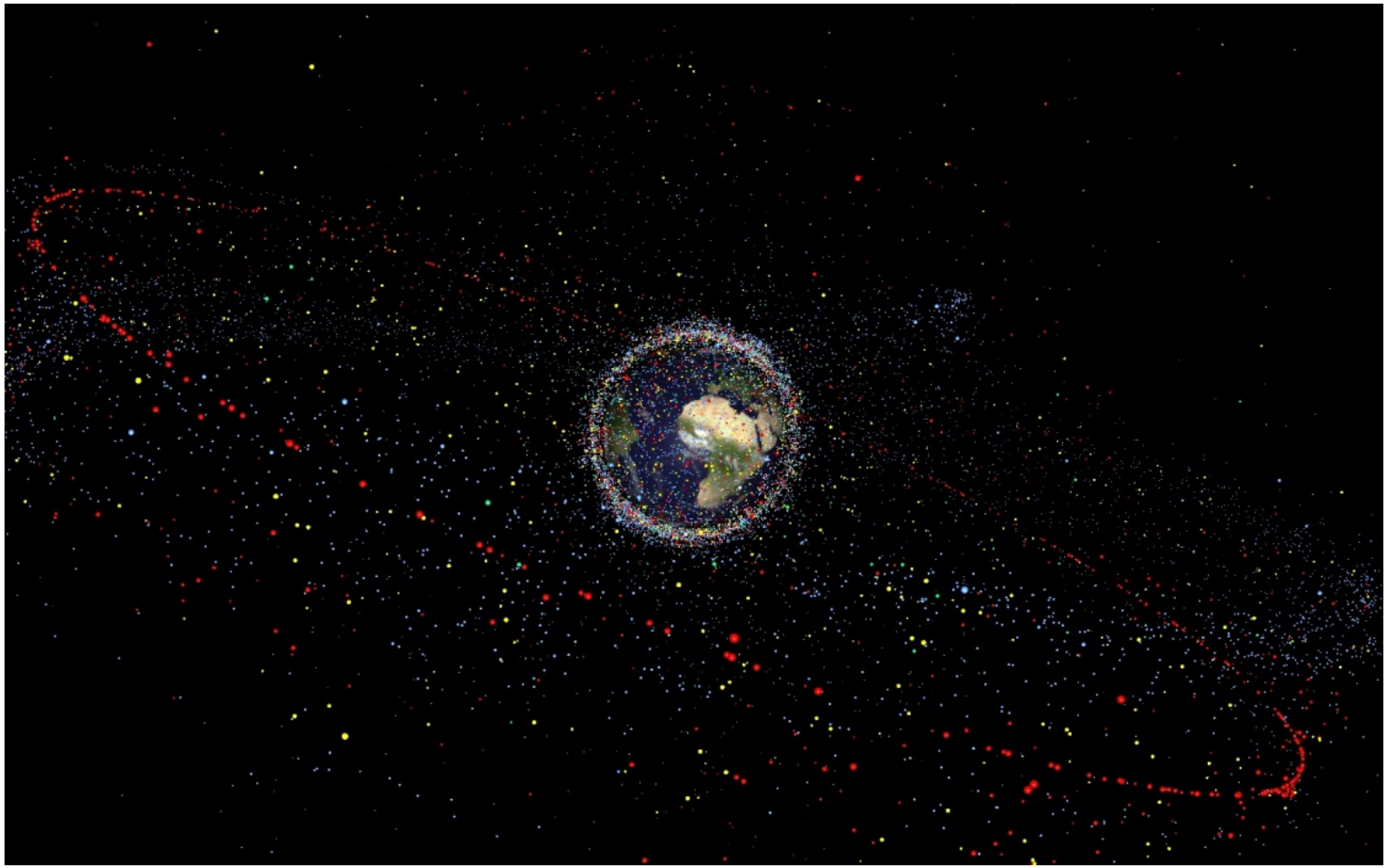

The Space Debris Problem

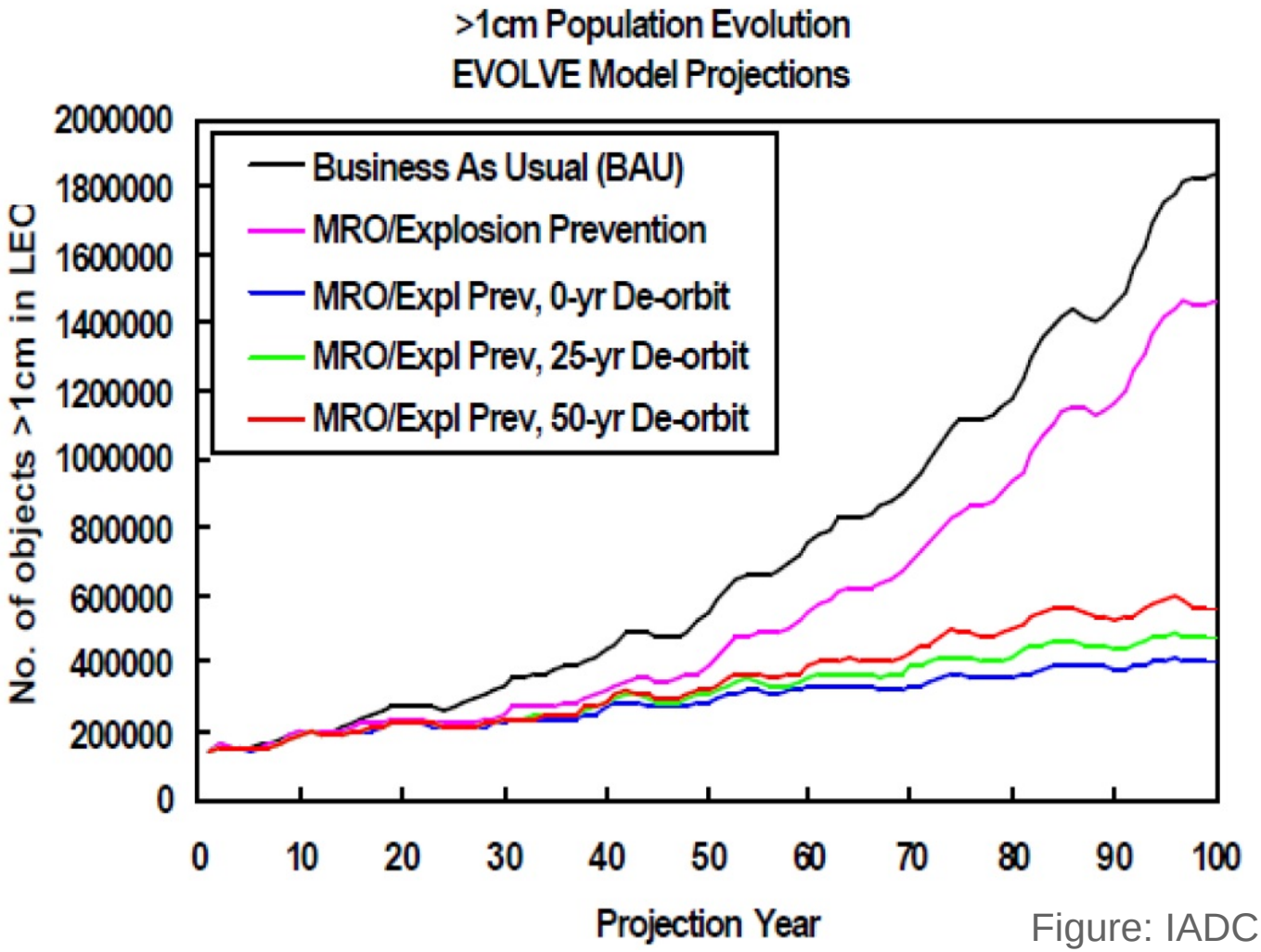

Figure: IADC

OHB Heritage: Robotic Components Verification on the ISS (ROKVISS)

- Demonstration and operation of robotic components under space conditions
- Demonstration of telepresence control modes
- Highly integrated modular robot joints designed by DLR-RM
- Launched in 2004, successfully operated for five years on the external Russian site of the ISS
- Funded by German DLR space administration

OHB Heritage: On-Orbit Servicing (for DLR)

DEOS Phase B1

- Funded by DLR space administration
- Goal: Capture of uncooperative target
- KT responsible for robotics

DEOS Phase B2

- KT responsible for target satellite including docking mechanism

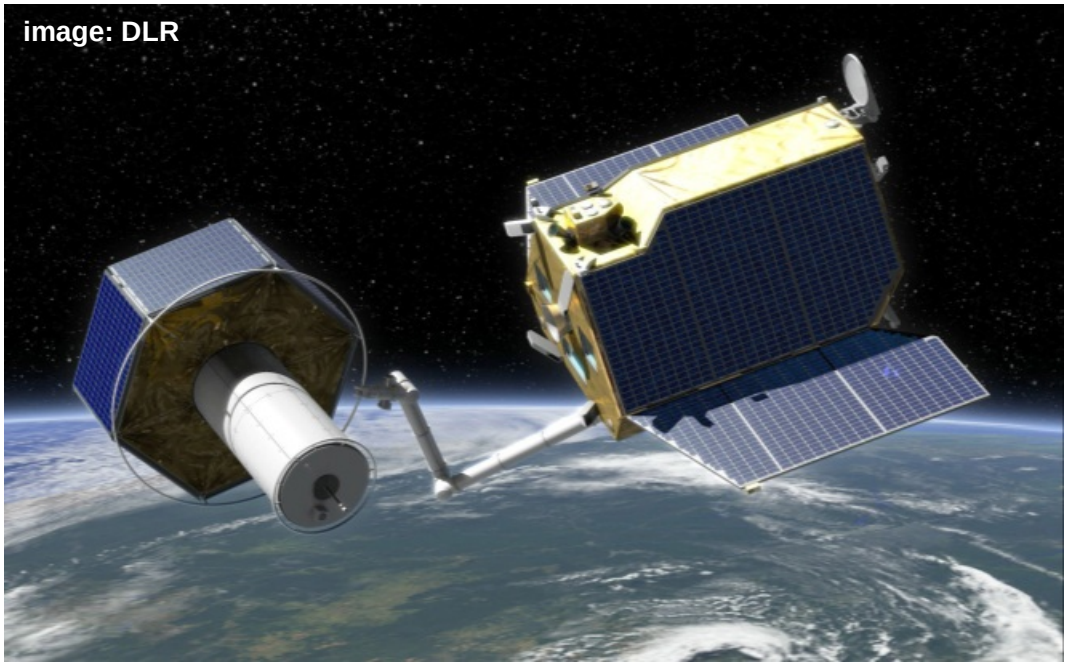

OHB Heritage: On-Orbit Servicing (Commercial)

SMART-OLEV

- Goal: Life extension for geostationary telecommunications satellites
- Commercial mission
- Co-funded by DLR, ESA
- KT responsible for robotics
- Status: Currently on hold

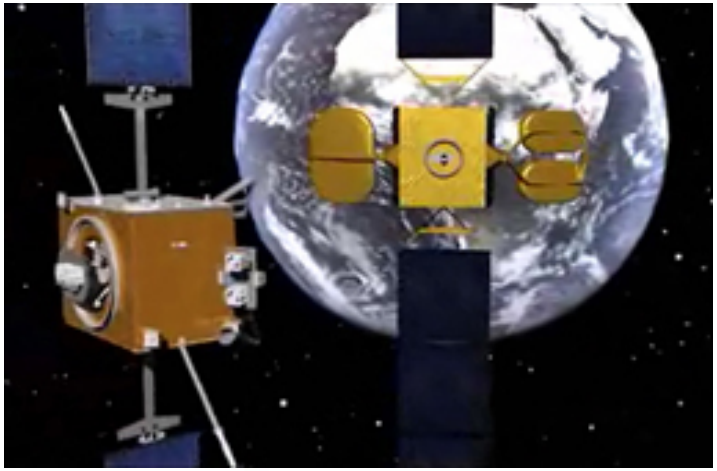

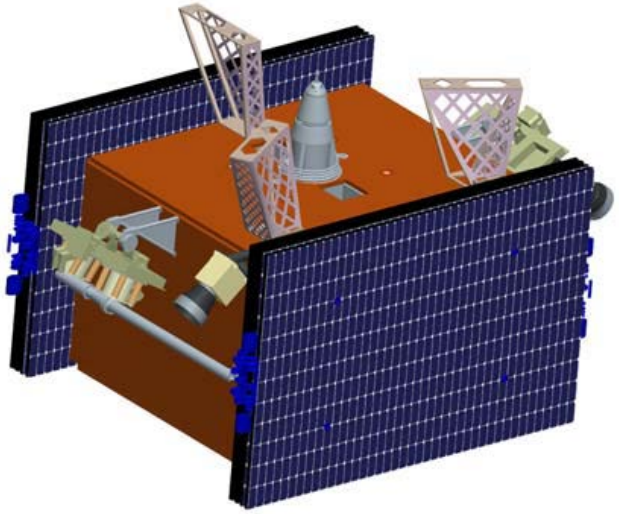

OHB Heritage: Vision Based Navigation Sensor System (VIBANASS)

- Purpose: Sensor for rendezvous, inspection and docking
- Ideal for Active Debris Removal concepts
- Tests at DLR‘s EPOS facility in early 2013 successful for all elements:
- Cameras
- Image recognition software
- Hardware-in-the-loop test with control algorithm
- Co-funded by DLR space agency

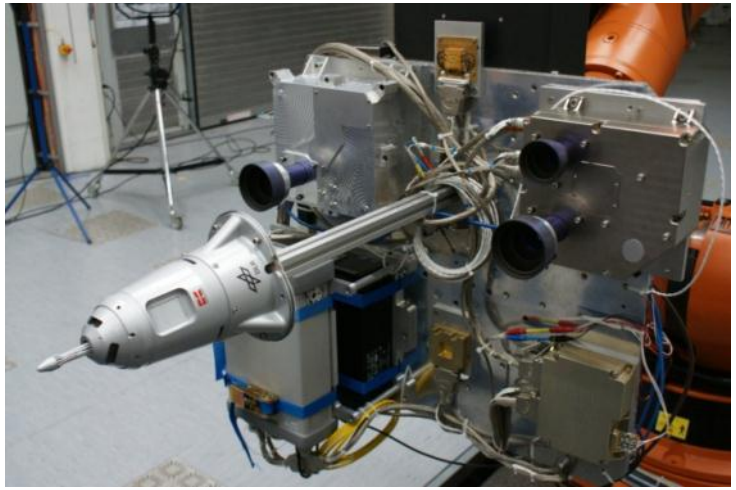

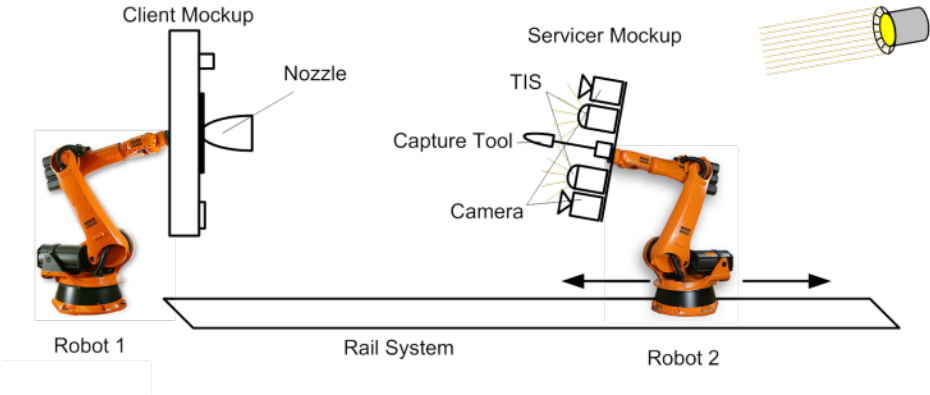

OHB Heritage: Active Debris Removal Activities (for ESA)

ADRS (Service-Oriented Approach to ADR)

- Funded by ESA
- Goal: Capture and controlled of large ESA debris
- Development of business models for large-scale cleanup
- KT prime and responsible for robotics

e.Deorbit Mission Phase A

- Funded by ESA
- Goal: Capture and controlled deorbit of large ESA debris
- KT prime and responsible for robotics

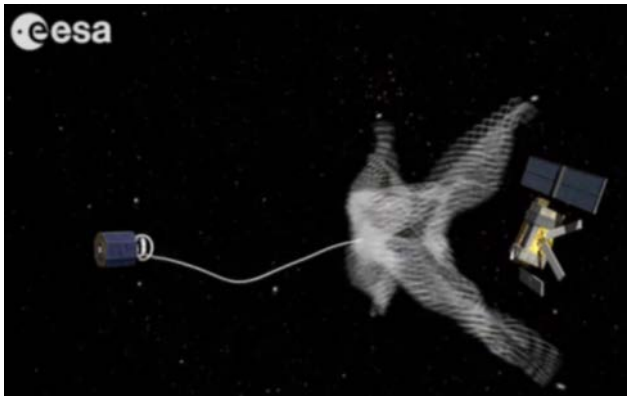

OHB System Goals

- Lead European development of orbital robotics systems
- Help maintain SSO accessible through ADR
- Offer on-orbit servicing in LEO and GEO

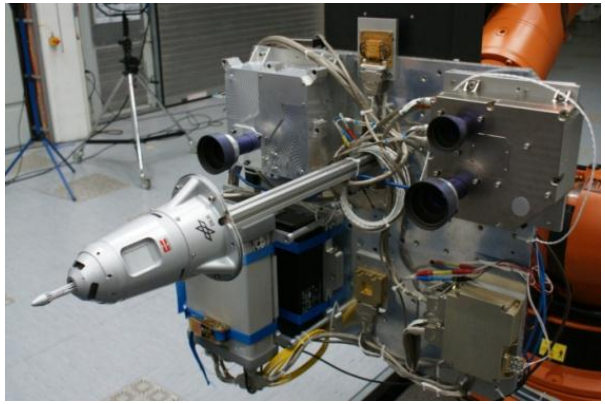

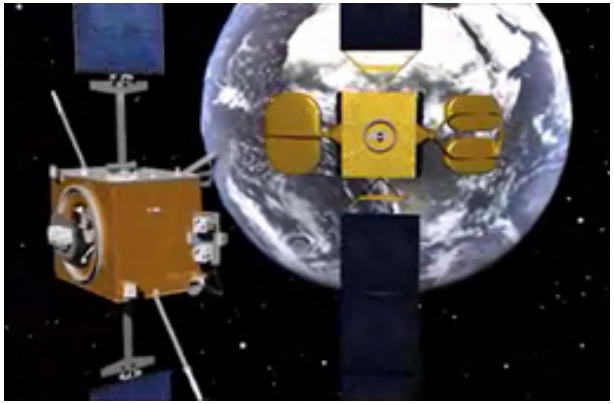

e.Deorbit Phase A Goals

The e.Deorbit Mission Objective:

- Remove a single large ESA-owned Space Debris from the LEO protected zone.
- Chaser to be launched by a small or medium launcher
- Perform a rendezvous with the ESA-owned debris (target)

Definition and Investigation of Different Mission Concepts:

- Controlled re-entry and a flexible connection to the target
- Controlled re-entry and a rigid connection to the target
- Re-orbiting outside of the LEO protected region (not included in presentation)

e.Deorbit Phase A: OHB Team and Expertise

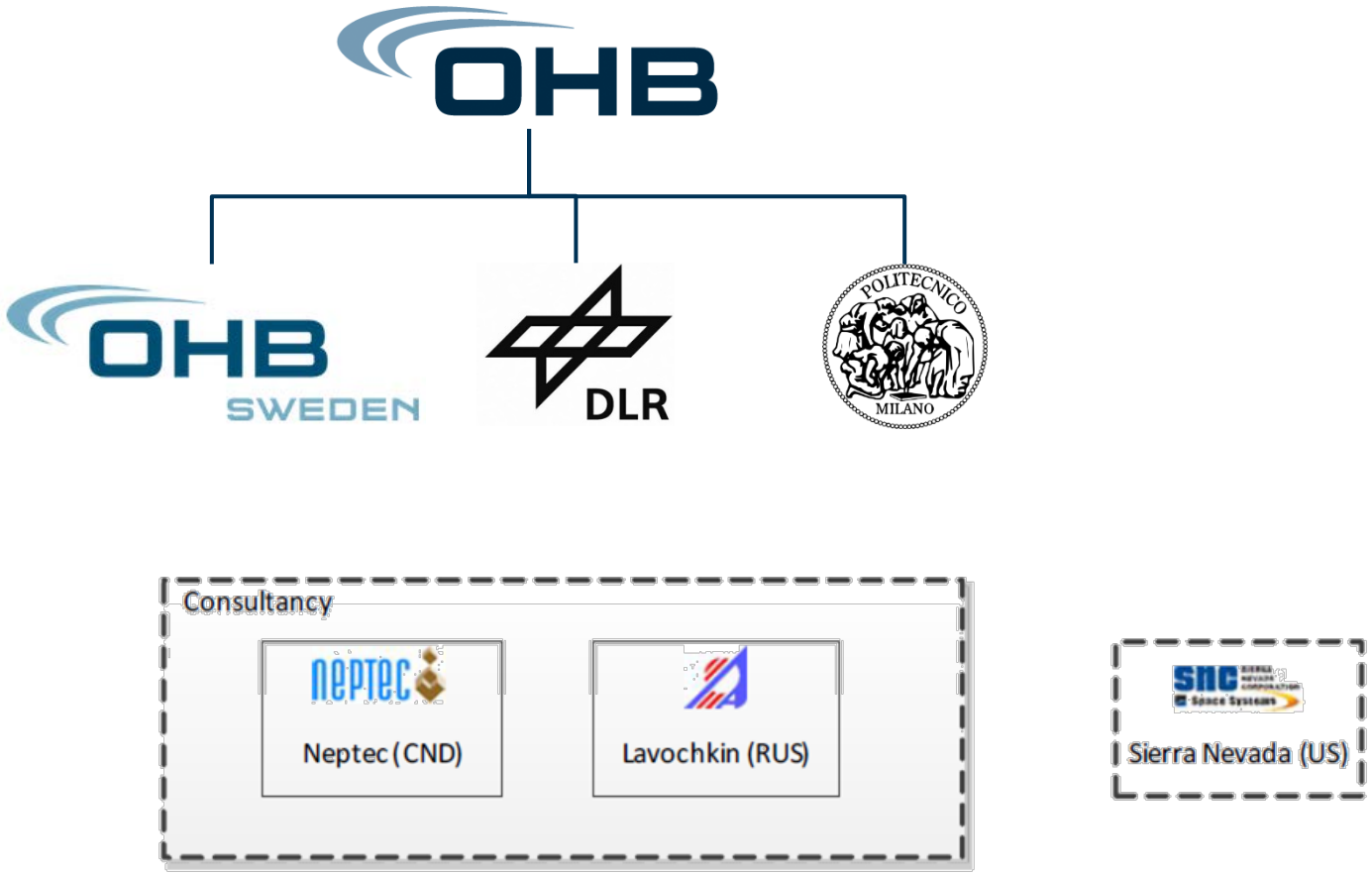

Reference Target: ENVISAT

- Orbit: 770 km circular SSO
- Mass: 7800 kg
- Size: 10 m long (26 m including solar generator)
- Rotation: Currently 3,5 °/s (reason unknown)

	Spin Reference Axes	Spin Rate [°/s]	Angle between Spin axes and reference axes [°]	Precession Rate Rotation of Spin Axes around Orbit AngMom axes [°/s]	Angular Rate Magnitude [°/s]
AC-1	Orbit Angular Momentum	5.0	0	0.15	>5
AC-2		5.0	45	0.15	>5
AC-3		5.0	90	0.15	>5

Investigated Capture Methods

Flexible Connection

- Net
- Harpoon
- Wrapping

Rigid Connection

- Arms
- Clamps
- Tentacles

Re-Orbit

- Solar sail
- Ion-Beam Shepherd

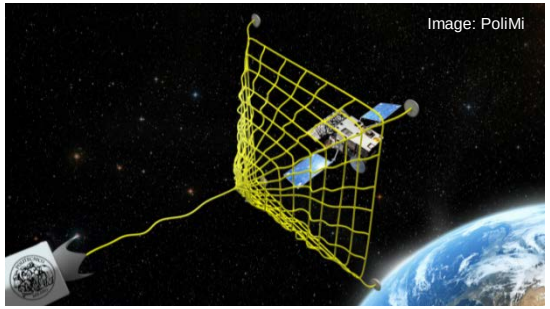

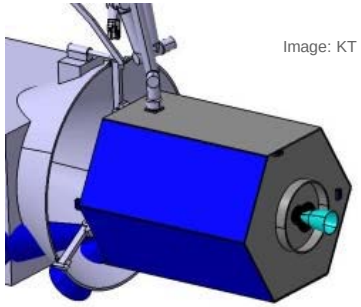

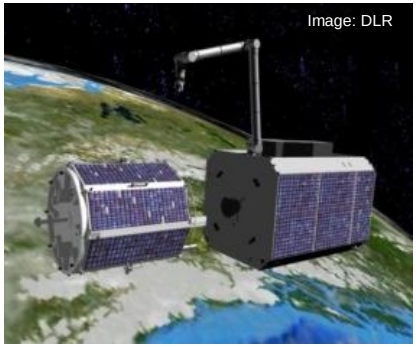

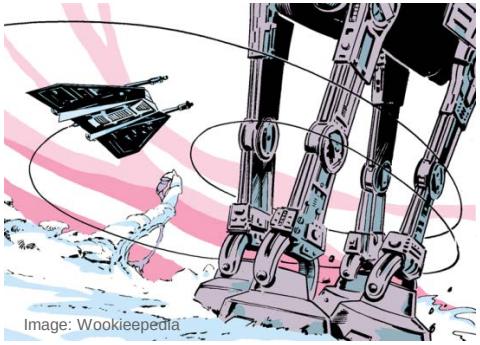

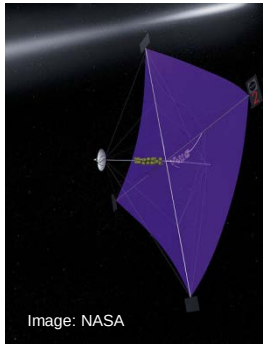

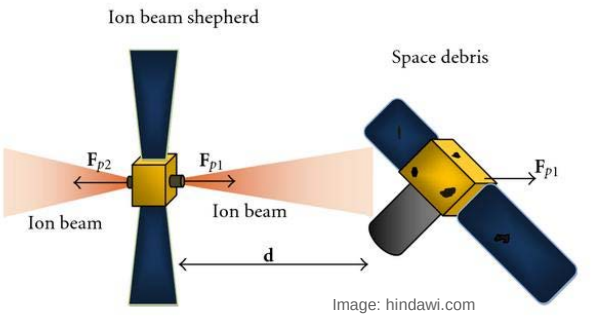

Flexible Capture: Elements

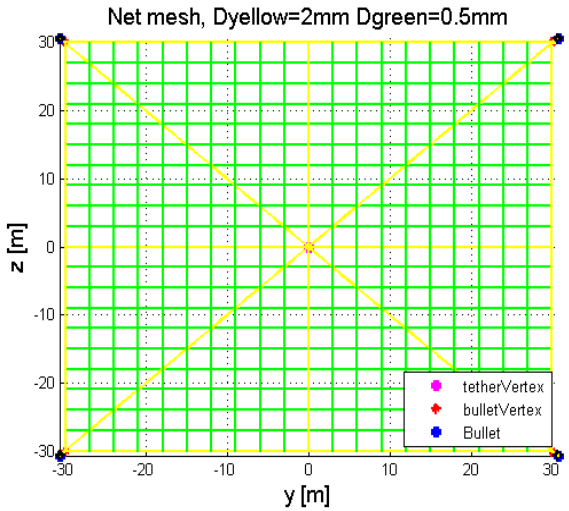

Net

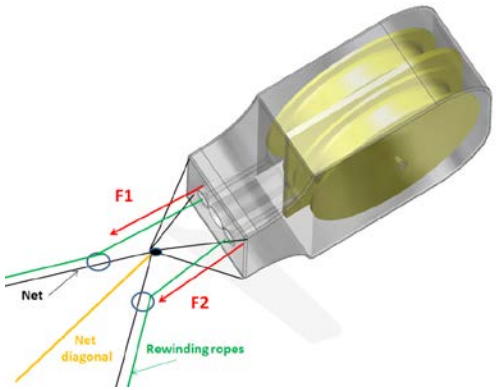

Bullets & Winch

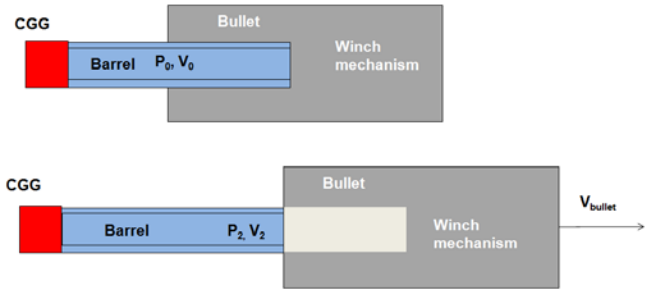

Cold Gas Generator

Tether

Flexible Capture: The Net

Material	Elongation at break [%]	Tensile Strength	Tensile Modulus	Density [kg/m^3]	Thermal decomposing Temperature
Dyneema	3,8	3,7	107	970	150
Technora	4,4	3,4	73	1390	500

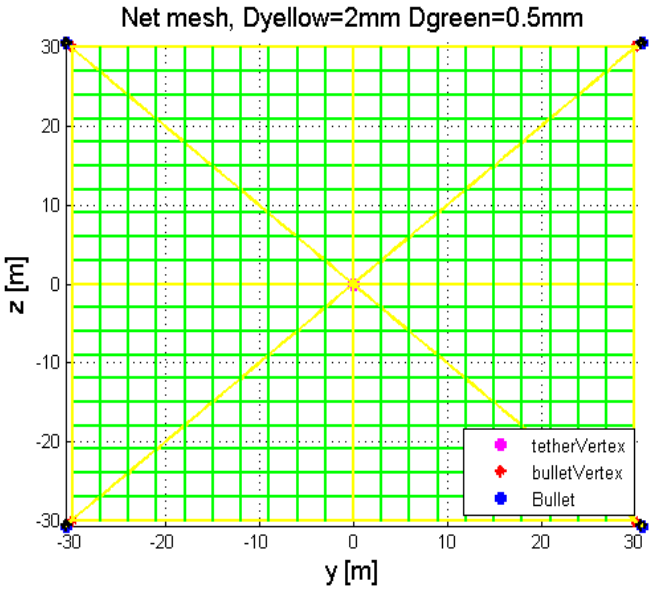

Material	Mass (20% margined) [kg]
Technora	6,67
Dyneema	2,88

Flexible Capture: The Bullets

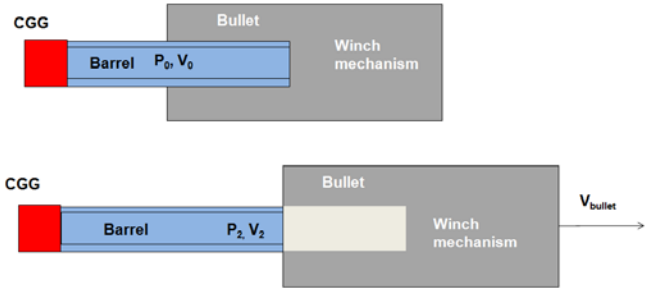

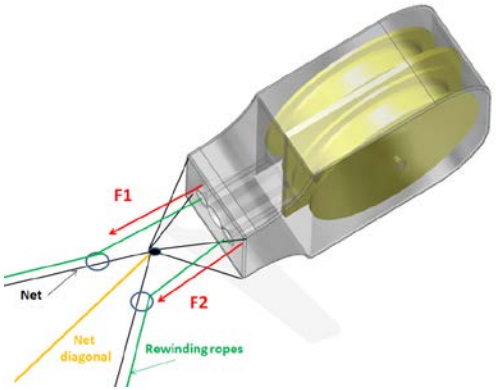

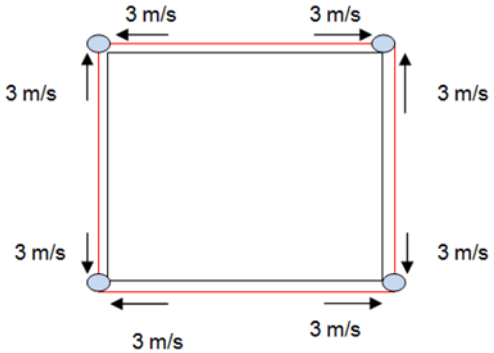

Bullet mass [kg]	Bullet ejection velocity [m/s]	Shot delay between each bullet ejection [s]	Ejection velocity angular deviation [deg] (with respect to vBar)	Chaser\ Target distance [m]	Time to deploy [s] (t_{dep}-t_{ej})
1	3	4	32	69.4	81.8

Flexible Capture: The Tether

Material name	Breaking strength$_u$ [GPa]	Young's modulus [GPa]	Density [g/cm³]	Melting/ decomposing temperature [°C]
Technora	3.4	73.3	1.390	500
Silicon carbide	2.6	350	3	Over 1400

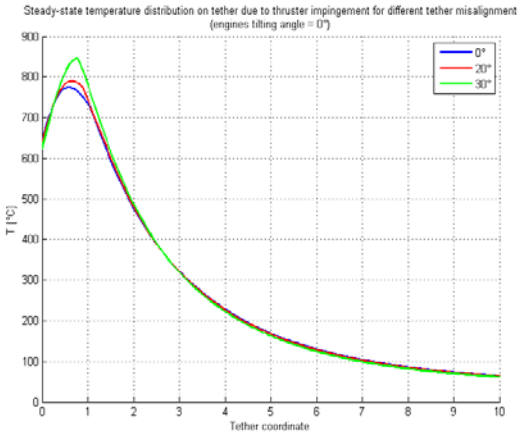

Material	Shape\braiding	Length (L0 L_{end}); L [m]	Ropes diameter [mm]	Mass [g]
Technora	cylindrical	(5-70); 65	2	283
SiC	cylindrical	(0-5); 5	2	47

Flexible Capture: The Package

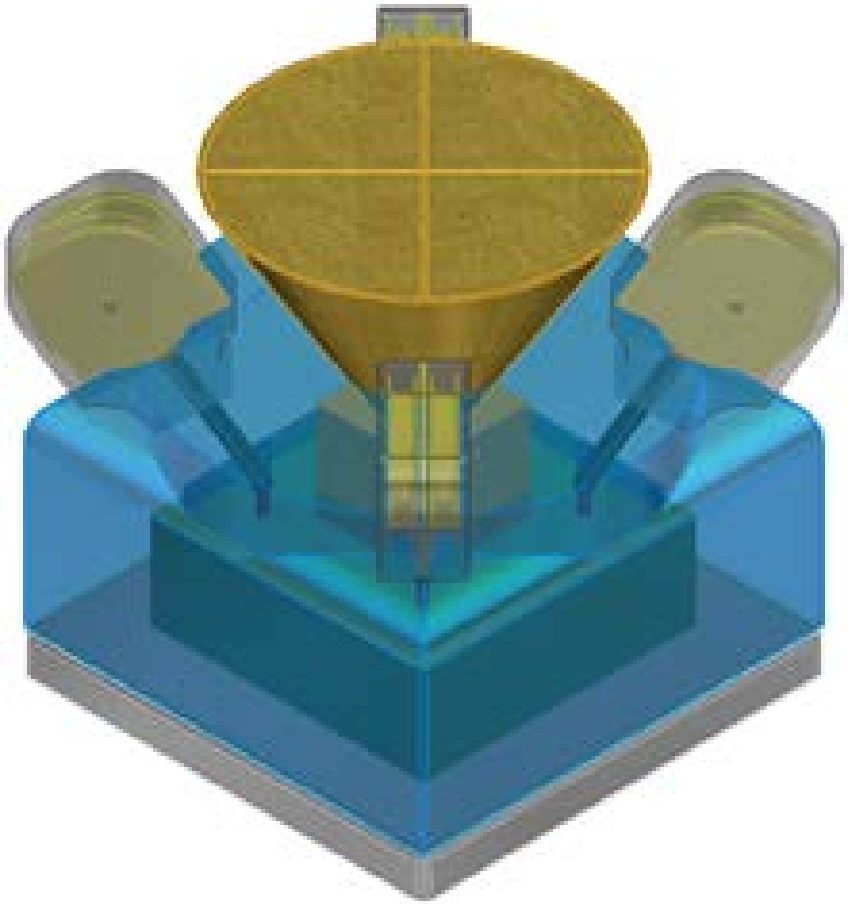

Flexible Capture: Chaser Design Concept

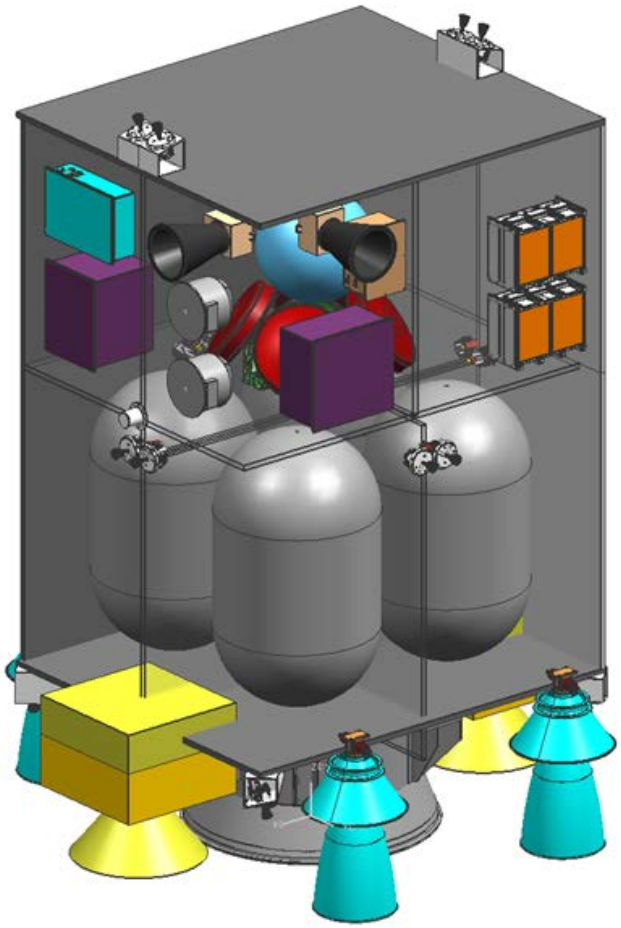

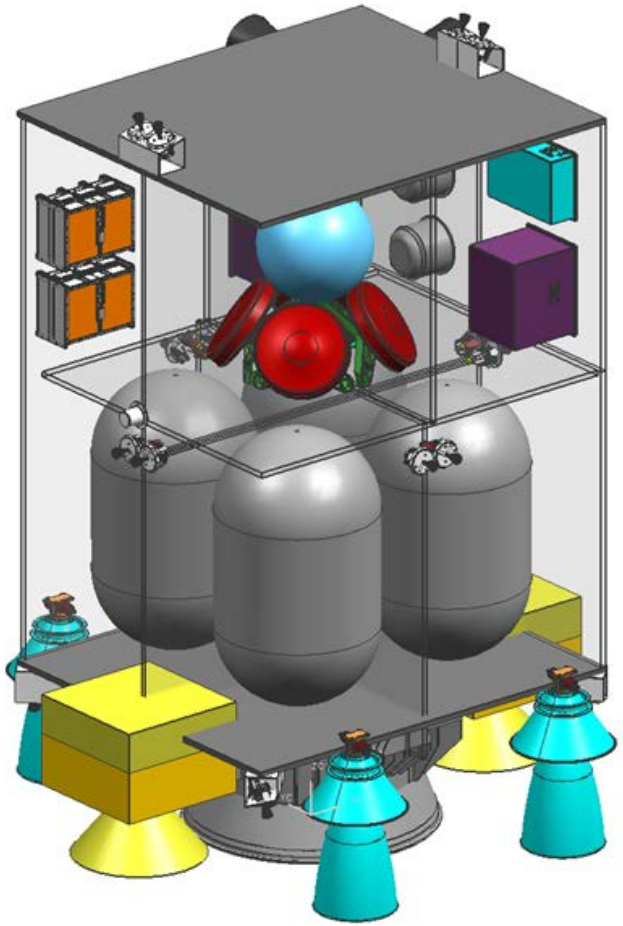

Rigid Capture: Elements

Robotic Arm

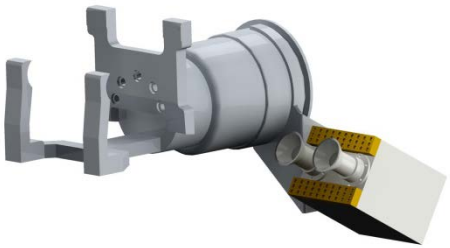

Gripper

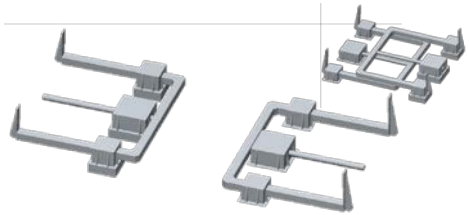

Clamping Mechanism

Rigid Capture: Robotic Arm

- 7 degrees of freedom
- 4.2 m long
- ROKVISS heritage joints
- Torque-based impedance control for compliant grasp maneuvers
- Redundant joint electronics

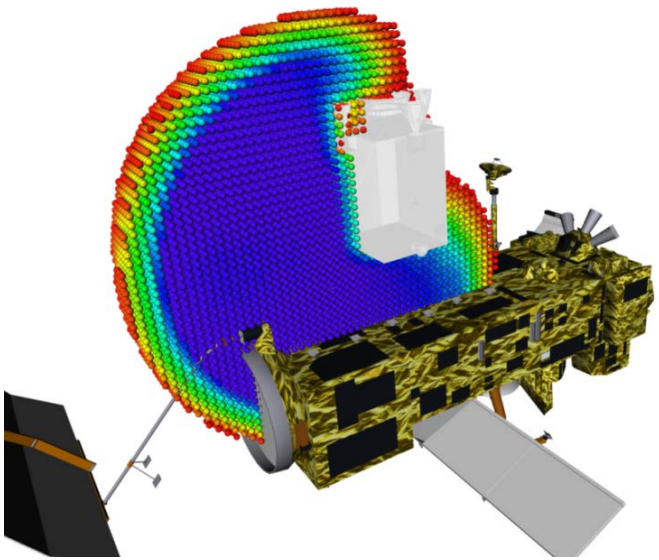

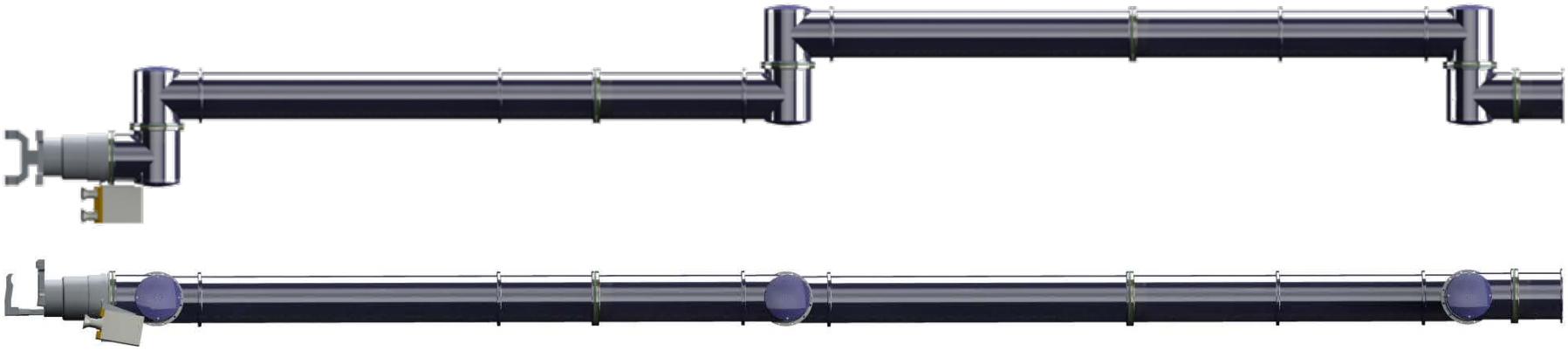

Rigid Capture: Gripper

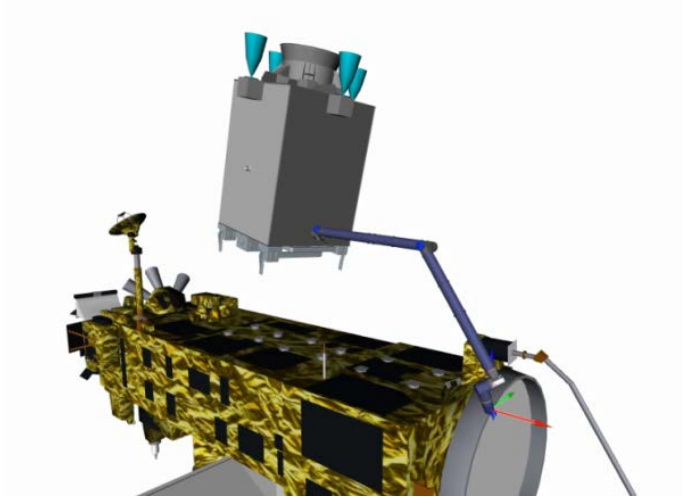

- Concept designed according to unique target features
- TCP stereo camera system with illumination units attached onto the gripper with mounting bracket

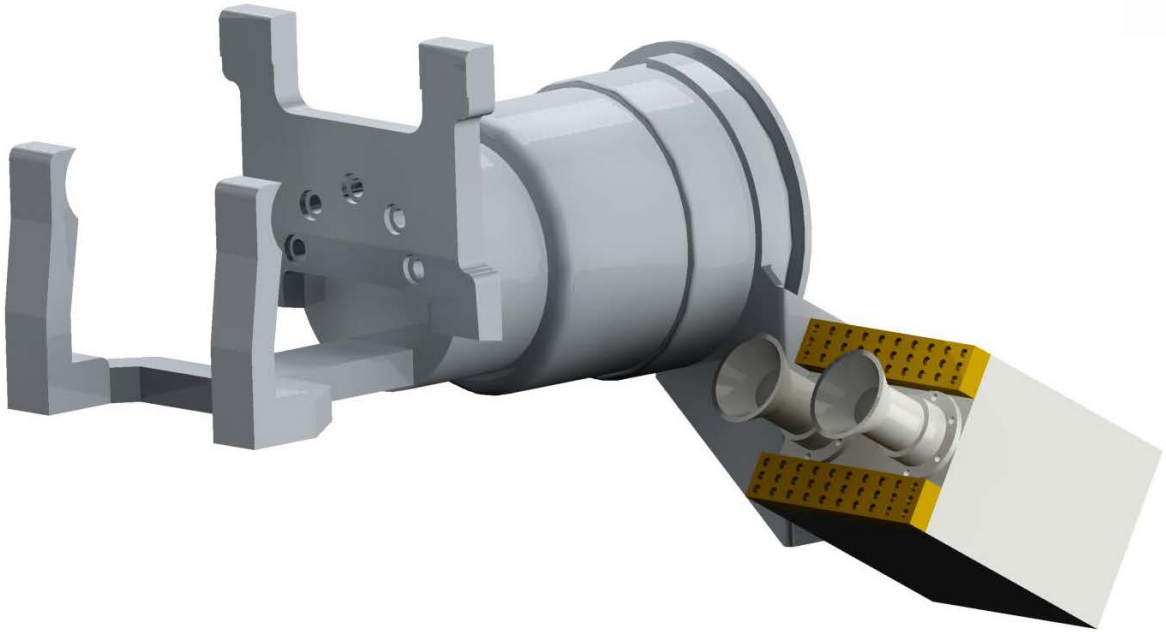

Rigid Capture: Clamping Mechanism

- Mechanism to support force transfer during deorbit meneuver
- Compact design
- Linear movement only
- Allows adjustments of CoM alignment

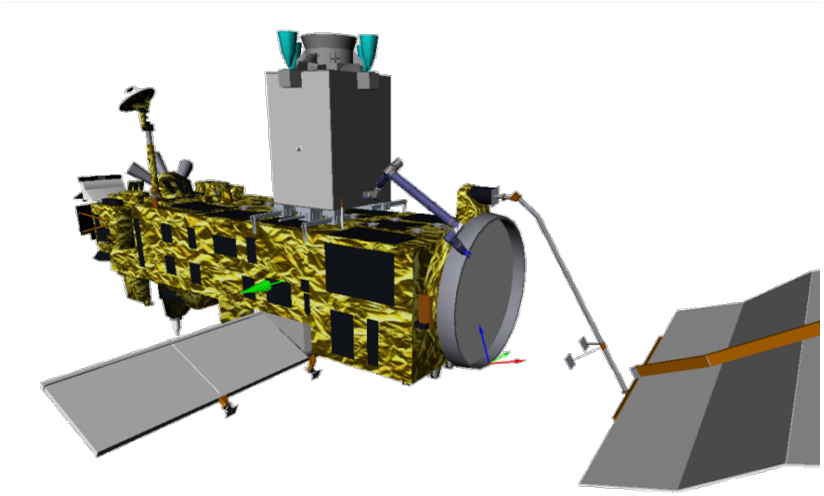

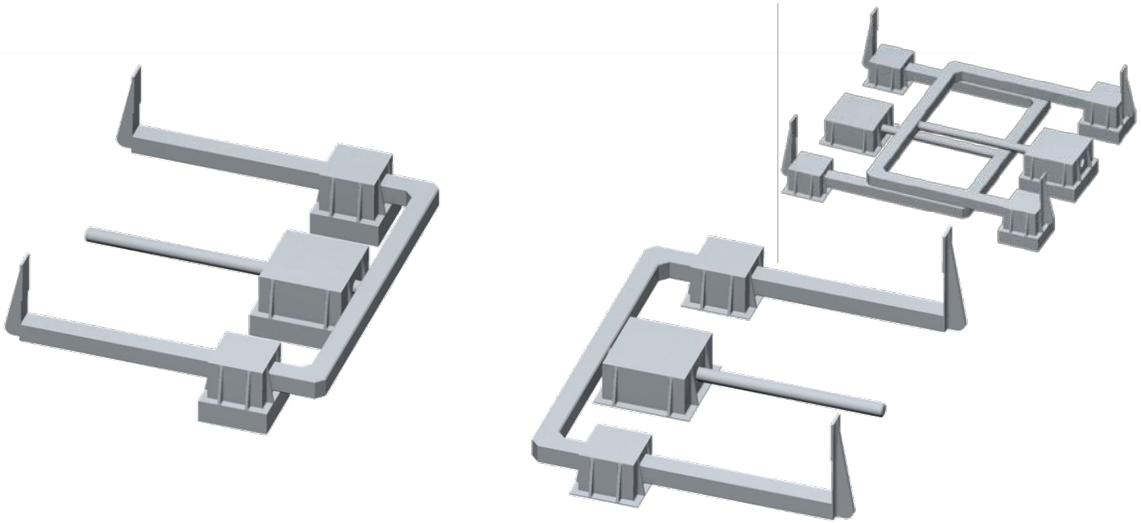

Rigid Capture: Chaser Design Concept

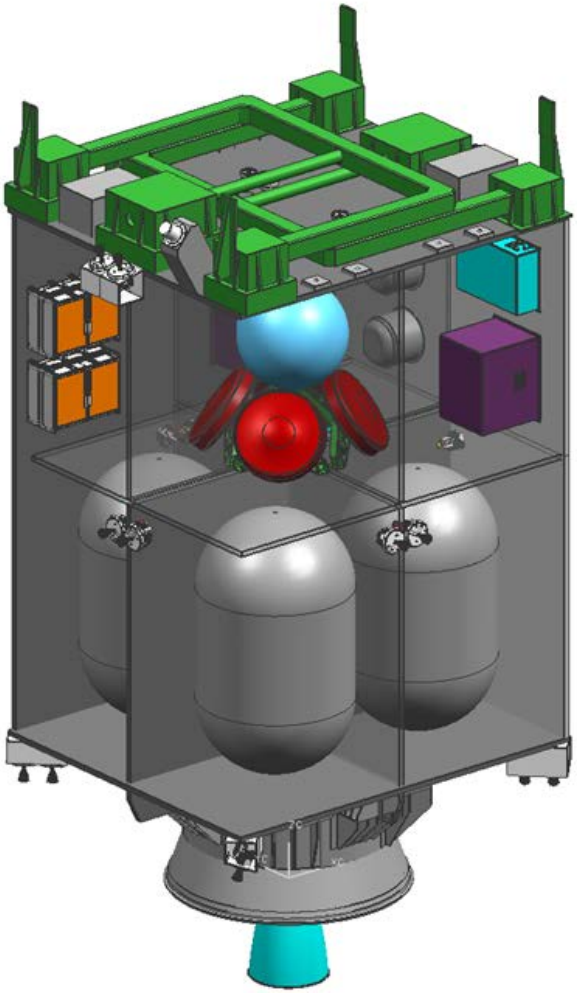

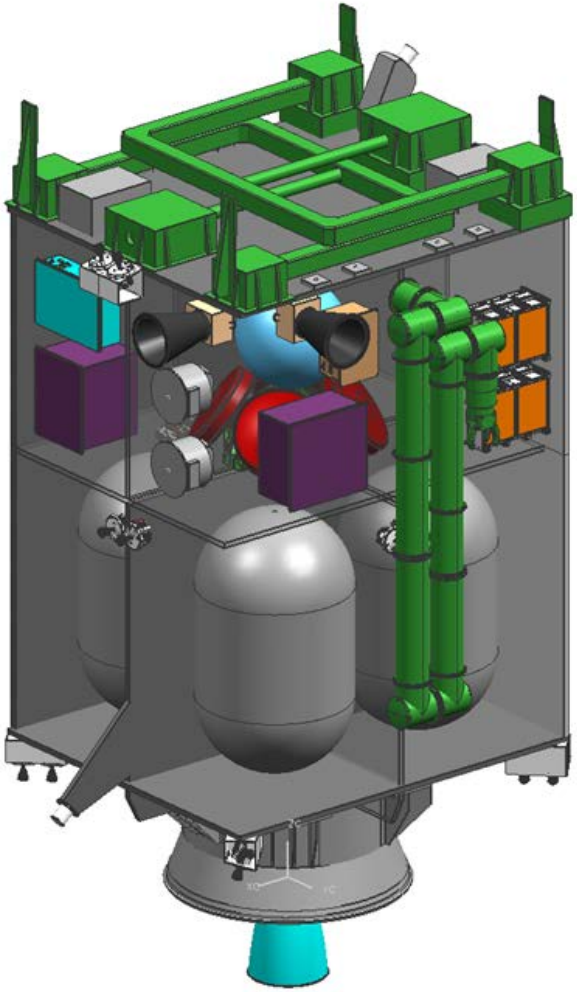

OHB Selection of Preferred Variant

Main Factors:

- Development Risk
- Design Verification

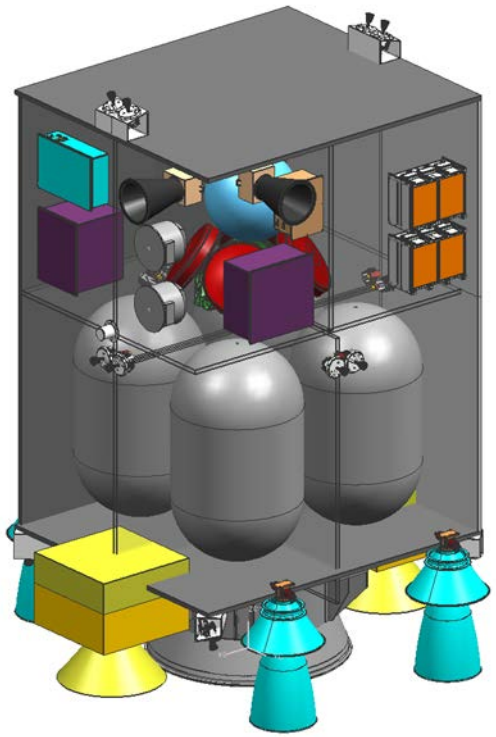

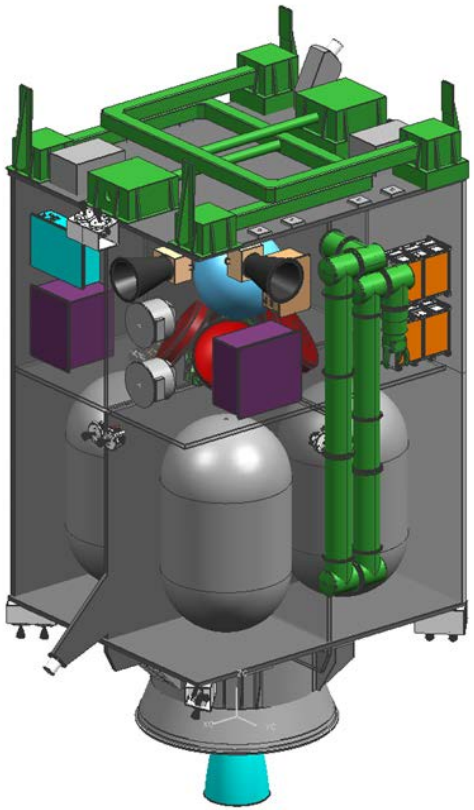

OHB Selection of Preferred Variant

Main Factors:

- Development Risk
- Design Verification

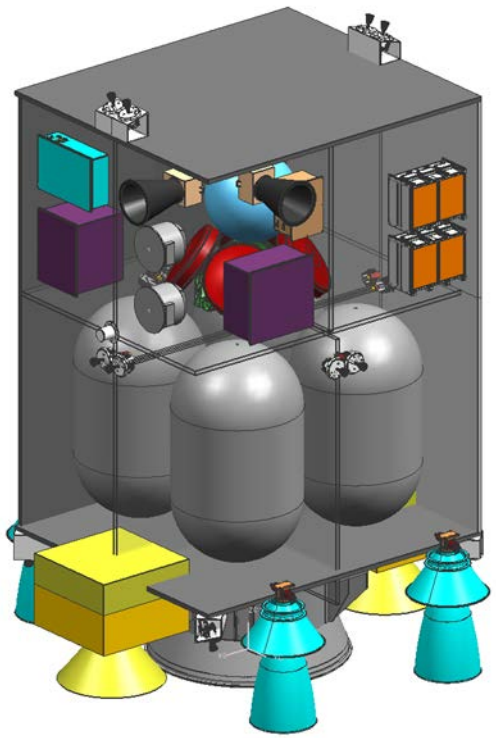

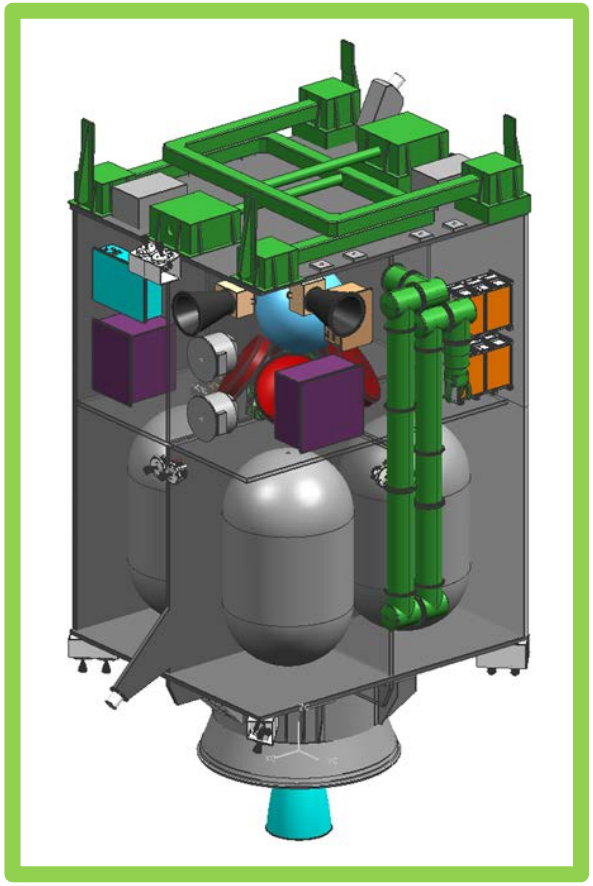

Summary and Way Forward

Phase A Results:

- Three mission concepts developed
- Fesibility demonstrated for each concept
- OHB trade-off prefers rigid de-orbit

Immediate Next Steps:

- Performance of Phase B1
- Raising of interest and awareness to prepare for B2/C/D

Future Opportunities:
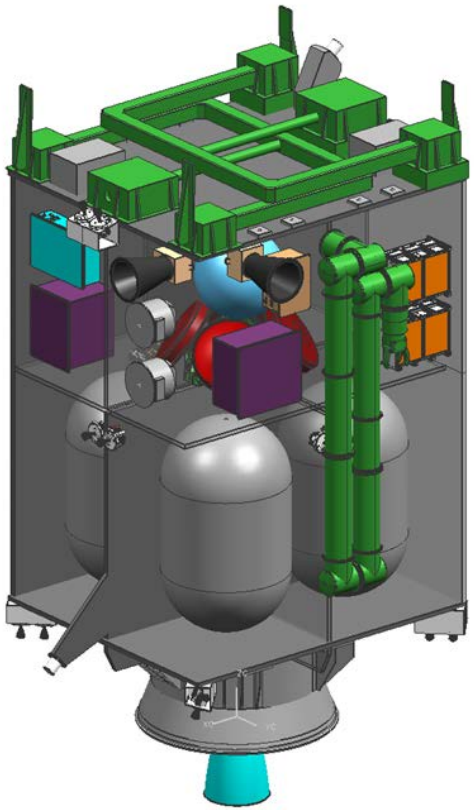
- Large-scale Active Debris Removal
- Commercial On-Orbit Servicing