Proceeding of the 7th International Symposium on Artificial Intelligence, Robotics and Automation in Space: i-SAIRAS 2003, NARA, Japan, May 19-23, 2003

AN EXPERT DIAGNOSTIC SYSTEM FOR THE DEEP SPACE PROBE MUSES-C TO FACILIATE ITS SAFE OPERATIONS DURING THE CRUISING PHASE

MITSUE MIZUTANI
Fujitsu Advanced Solutions Limited
1-2-4, Shinkoyasu, Kanagawa-ku, Yokohama-shi, Kanagawa 221-0013, Japan
Email: mitsue@fasol.fujitsu.com

MASASHI HASHIMOTO
Institute of Space and Astronautical Science (ISAS)
3-1-1 Yoshinodai, Sagamihara, Kanagawa 229-8510, Japan
Email: masashi@nnl.isas.ac.jp

NAOMI NISHIGORI
Fujitsu Limited
9-3, Nakase 1-chome, Mihama-ku, Chiba-shi, Chiba 261-8588, Japan
Email: gori@jp.fujitsu.com

Keywords: abnormalities, cruising phase, diagnostic expert system, deep space probe, GEOTAIL, MOZOMI, MUSES-C, operational problems, scientific satellite, spacecraft, troubles, transfer phase

Abstract

MUSES-C is the first Japanese sample-return program scheduled being launched on May 2003. MUSES-C will arrive at the asteroid "1998 SF36" in 2005 and return to the Earth in 2007 after collecting samples from the surface of the asteroid.

MUSES-C requires being watched carefully to catch the early signs of its trouble because it requires being operated safely with a few operators during the long cruising phase, while experts in charge of spacecraft design are not always available.

This paper describes an expert diagnostic system being developed for MUSES-C at the Institute of Space and Astronautical Science (ISAS) in Japan. As communication capacity of MUSES-C is extremely small in the most of cruising phases, the data can be used for diagnosis is limited. This diagnostic system will refer the past one-week of data to show the trend, watch and diagnose MUSES-C with high-level estimation to facilitate its safe operations during the cruising phase.

1. Introduction

ISAS developed two expert diagnostic systems to help safe operations of space probes, one for geomagnetic observation satellite GEOTAIL launched in 1992, and the other for Mars probe NOZOMI launched in 1998. We call these diagnostic systems "ISACS-DOC" (Intelligent Satellite Control Software-DOCtor). We have performed safe operations with a small number of operators using ISACS-DOCs.

Now we are developing ISACS-DOC for the asteroid's sample-return mission MUSES-C based on above-mentioned experiences. This paper reports on the improved points of the expert diagnostic system for MUSES-C of which communication links are not so strong and how ISACS-DOC supports the MUSES-C operation with strictly limited information.

2. Outline of MUSES-C

2.1 Objectives

MUSES-C is a space engineering spacecraft with the aim to reach the asteroid "1998SF36", collect the samples from the surface of the asteroid, and bring them to the Earth.

Technological meaning of MUSES-C is the demonstration of:

- Ion engines as a primary propulsion system,
- Autonomous guidance and navigation system,
- Sample collection mechanics,
- Direct reentry from an interplanetary trajectory for sample recovery on the ground.

Scientific meaning of MUSES-C is the study of the beginning and evolution of the solar system by researching:

- Samples from the surface of the asteroid,
- Observation data near the asteroid.

2.2 Events on the trajectory

Followings are events on the trajectory of MUSES-C.

- Launch: May 2003
- Cruising phase to the Asteroid:
  ISACS-DOC diagnoses MUSES-C
- Arrival at the Asteroid: Sept.2005
- Mission phase at the Asteroid
- Departure from the Asteroid: Jan. 2006
- Cruising phase to the Earth:
  ISACS-DOC diagnoses MUSES-C
- Return to the Earth: Jun 2007

The maximum Earth-spacecraft distance is 2.52AU.

2.3 Operations during the cruising phase

MUSES-C will be operated as follows during the cruising phase.

One cycle of spacecraft operation corresponds to one week on the Earth.

1st day:

- Tracking with High Gain Antenna (HGA) for 4 hours in 4kbps.
- IES power off, and Z-axis pointing to the earth.
- Downloading 3Mbytes of stored telemetry data in 3.5 hours.

2nd - 6th day (for 5 days):

- Tracking with Middle Gain Antenna (MGA) for 3 hours in 8 bps (minimum rate).
- Ranging operation mainly.
- Downloading the report-packet information and one or two sets of real time telemetry data at the beginning of the spacecraft's operation.

7th day:

- Off day on the ground station.
- IES power on, and Z-axis pointing to the sun with autonomous function.

3. General features and operational problems of deep space probes as MUSES-C

Generally, deep space probes reach a longer distance than satellites orbiting around the Earth, so they have those two operational problems as follows.

One is about the communication delay time between the Earth and the spacecraft. Even the real time telemetry data only shows a past state of the spacecraft, and command sent from the Earth take a long time to arrive at the spacecraft. For that reason, there is a high risk that the coping with the trouble of the spacecraft might be too late.

The other is about the long cruising phase before reaching the destination. At the launch, the mission or the reentry phases of the spacecraft, many experts in charge of spacecraft design watch the spacecraft carefully and keep its safe. But during the cruising phase, it is required to keep the spacecraft safe with limited operators, because high-level experts are not always available in limited budget.

There are two approaches to solve these problems. One is to improve the autonomous functions of the spacecraft and make the spacecraft find and cope with the trouble by itself on board. The other is to catch the early signs of the spacecraft's trouble and cope with the trouble as soon as possible from the ground station.

4. Distinctive features and operational problems to be solved of MUSES-C

4.1 Distinctive features of MUSES-C

(1) MUSES-C uses Ion Engine System (IES) as a primary propulsion system

MUSES-C uses the high rate of thrust Ion

Engine System (IES) for over 90% of the voyage, instead of swing-by navigation to shorten the period of time in flight.

(2) MUSES-C keeps its attitude in 3-axes control (not in spin)

It is necessary for MUSES-C to keep its attitude in the direction of movement during IES in operation. MUSES-C also needs its 3-axes to be controlled as to get high electric power from its solar cell paddles expanded toward the Sun.

(3) MUSES-C has the autonomous functions

To keep the spacecraft safe by itself, MUSES-C has autonomous functions such as the Under Voltage Control (UVC) function, switching over to other IES operation mode or stopping the ion engines, etc. By these autonomous functions onboard, IES is also kept in its good working order even if the spacecraft is invisible from ground station. The key actions of the spacecraft including those by the autonomous functions are downloaded as a 'report packet' earlier than real time telemetry data downloaded just after communication links between the spacecraft and the ground station is connected.

(4) The communication links of MUSES-C are not so strong

As both of HGA and solar cell paddles of MUSES-C fixed to the same direction of +Z-axis, MUSES-C points the HGA toward the Sun to get high electric power in normal operations. So that MUSES-C mainly uses Middle Gain Antennas (MGA) or Low Gain Antennas (LGA) to communicate with the ground station. But the electric power for communication is strictly limited.

4.2 Distinctive problems to be solved in MUSES-C operation

(1) Operational problems caused by using IES

(a) As IES always accelerates the spacecraft, we have to watch if the spacecraft is in the intended attitude on the planned trajectory and accelerates as scheduled.

(b) As IES consumes much electric power, we have to know how much IES is using the electric power and also watch the whole power control system for any other instruments.

(c) As IES might cause severe damage to the spacecraft (it discharges high electricity), we have to know how IES is running and watch it to work as scheduled.

(d) As IES is running even while the spacecraft cannot be seen from the ground station, we have to know IES condition from a very few information received when the spacecraft is visible from the ground station.

(2) Operational problems caused by the attitude in 3-axes control

(e) As only small divergence of reaction control should cause serious disorder in attitude differently from spin stabilized satellites, we have to watch the reaction control system.

(f) As MUSES-C has many antennas, we have to know which onboard antenna is selected and estimate the communication link margin correctly. MUSES-C has three low-gain antennas, two middle-gain antennas and one high-gain antenna, and it is complicated to switch them.

(3) Operational problems caused by the autonomous functions

(g) As the report-packet information is very important, we have to understand it timely. It shows the key actions of the spacecraft. We have to know which autonomous function ran from what reason, and the state of the spacecraft after the autonomous function ran.

(4) Operational problems caused by not so strong communication links

(h) As we can get only one or two sets of real time telemetry data by one contact to the spacecraft in normal operation, we have to know the state of the spacecraft with making maximum use of the giving information. It is desirable that we understand the state of the spacecraft from the information given by the ground facilities' data even if the real time telemetry cannot be received.

5. How to solve these operational problems?

We take an approach to catch the early signs of the spacecraft's trouble from the ground station to solve those operational problems. We don't discuss an approach to improve the autonomous functions on board as the spacecraft is given. As the ISAS needs to keep the spacecraft safe with a small number of operators, this approach is particularly required

during the long cruising phase.

A Quick Look system (QL) is to use for MUSES-C operation. The QL covers the whole of the spacecraft status and shows the present states of them. There are so many items of status or value to be displayed that the QL has many kinds of screen displays. The QL is useful to get an overview of the spacecraft, but it is unsuitable to catch the early signs of the spacecraft's trouble.

The expert diagnostic system can make an accurate estimate, compare the estimation with the actual value or status, and then show the inference results to help operators to catch the early signs of the spacecraft's trouble. If the trouble is found, the system displays the useful information for operators to understand it.

We believe that the expert diagnostic system is useful to solve those operational problems.

6. ISACS-DOC: Expert diagnostic system for MUSES-C

ISACS-DOC for MUSES-C, an expert diagnostic system developed to solve the operational problems of MUSES-C, will be described in following. ISACS-DOC will start to work after MUSES-C launched. Its main target of diagnosis is during the cruising phase.

6.1 Objectives of ISACS-DOC

The objectives of ISACS-DOC are as follows:

- To grasp the state of the spacecraft.
- To catch the early signs of the spacecraft's trouble.
- To find troubles of the spacecraft and give the first-aide action to keep the spacecraft safe.

6.2 Functions in ISACS-DOC

ISACS-DOC calculates expected values of the key items to operate MUSES-C precisely, compares them with observed or measured values, and then actualizes a high-level inference.

ISACS-DOC displays the trend-monitor graphs to show the state of the spacecraft.

ISACS-DOC checks statuses or values of the telemetry and the ground data, and searches troubles to be found at that time.

When ISACS-DOC finds a trouble, it outputs necessary information about the trouble concretely, such as the relate status or value operators should be known, the danger-level of the trouble, how to cope with the trouble, etc.

6.3 System Construction of ISACS-DOC

ISACS-DOC consists of two computers as shown in figure 1. The Workstation (WS) collects the data to be monitored and diagnosed through the network, edits the files of these data, and transfers these files to the personal computer (PC). The PC gets the files of the data, diagnoses, and displays the results.

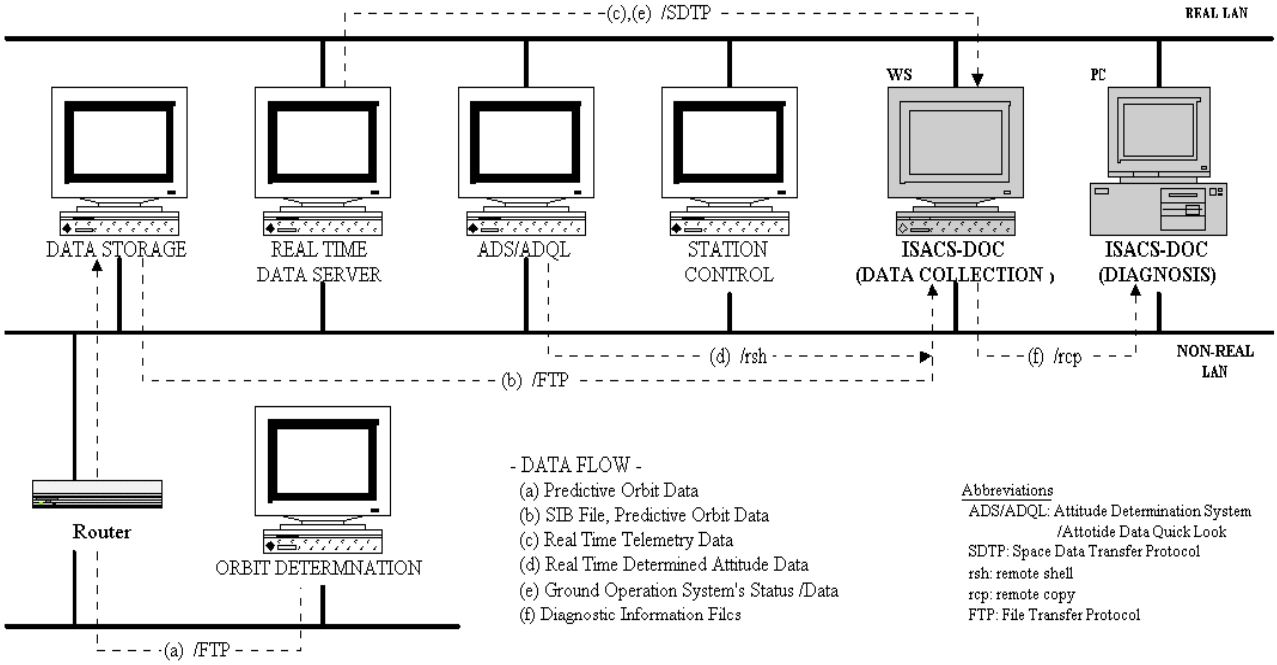

Figure 1 System Construction of ISACS-DOC for MUSES-C

6.4 Diagnosis flow in ISACS-DOC

The diagnosis flow practiced in ISACS-DOC for MUSES-C is shown in figure 2. The following diagnosis flow was adopted to solve the operational problem (h).

The PC requests the data to the WS. If the WS can collect some diagnostic data, the WS transfers the data files to the PC. The WS also informs the PC about the types of the data collected at that time such as the ground data, the real time telemetry data, the report-packet information, the reproduced telemetry data, etc.

If only the ground data are given, ISACS-DOC can also diagnose using only the ground data.

If the real time telemetry data are given, ISACS-DOC collects the ground data at the received time of the real time telemetry, and diagnoses using both the ground data and the real time telemetry data.

If the report-packet information is given, ISACS-DOC keeps the information in the database. And ISACS-DOC always displays the recent key actions of the spacecraft from the report-packet information.

When the spacecraft can be seen from the ground station, ISACS-DOC diagnoses it using the real time data. The downloaded reproduced telemetry data for a week are sorted according to their TI-time (the time by the Time Indicator on the spacecraft). ISACS-DOC diagnosis using the sorted reproduced telemetry data in a batch mode, then prints the history of the diagnosis, and displays the trend-monitor graphs for a week.

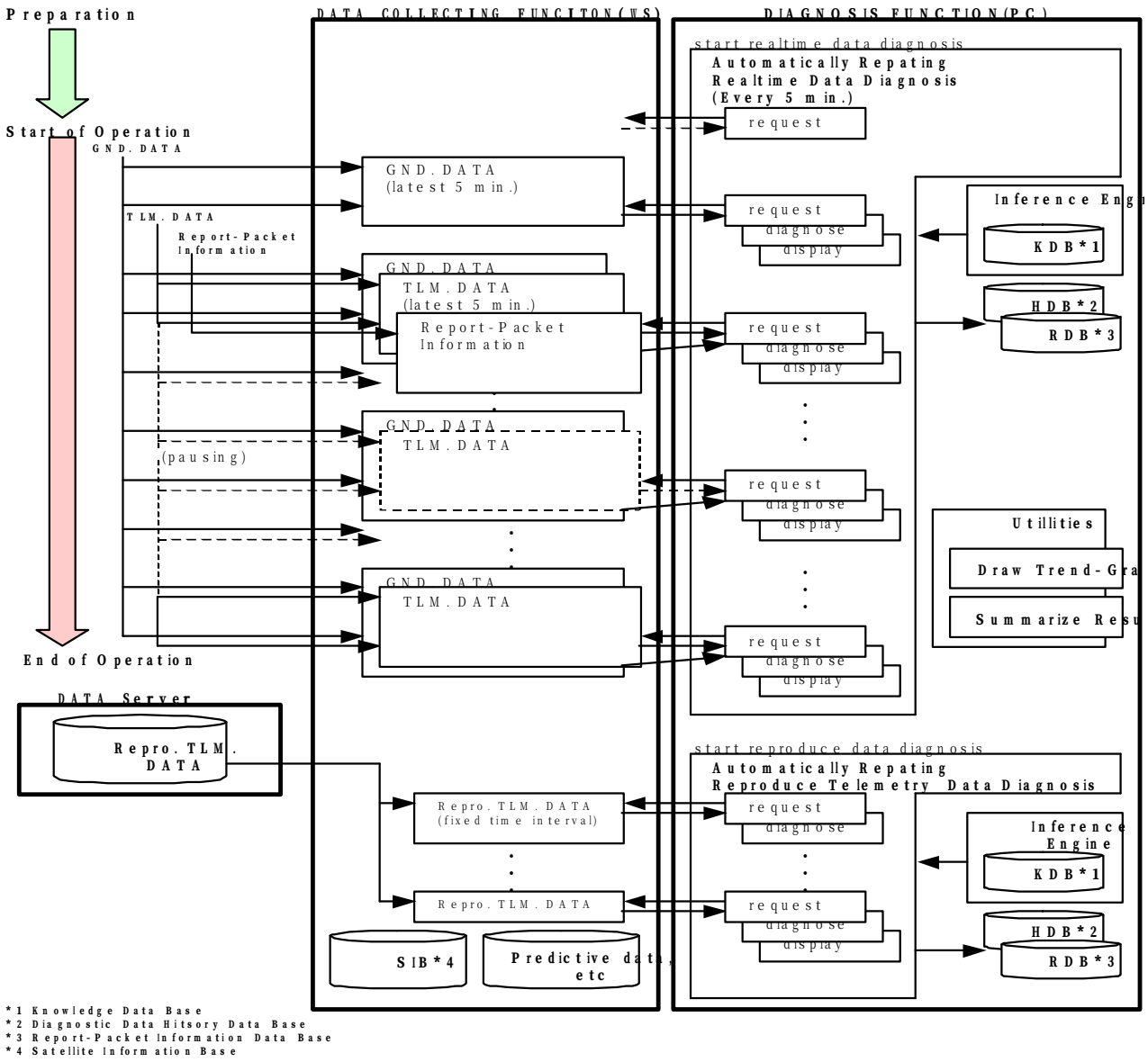

Figure 2 Diagnosis Flow in ISACS-DOC for MUSES-C

Table 1 Scale of knowledge database in ISACS-DOC for MUSES-C

No.	Classes		Questions (Check items for Diagnosis)	Nodes			
				Top	Medium	Results	Total
1	Management		9	1	5		6
2	Diagnosis with Ground-data	Communication	Examining		1	Examining	1
3		Orbit & Range Rate	Examining		1	Examining	1
4	Diagnosis with Ground-data	Communication	Examining		1	Examining	1
5	& Real Telemetry-data	Attitude	Examining		1	Examining	1
6		Communication	Examining		1	Examining	1
7		Power	81		1	21	22
8	Diagnosis with Telemetry-data	Data Handling	14		1	5	6
9		Data Recorder	4		1	2	3
10		Ion Engine	94		1	14	15
11		Reaction Control	47		1	14	15
12		Orbit & Attitude	26		1	6	7
13		House keeping	2		1	1	2
14	Regular Monitor	Report-Packet Monitor				1	1
15		Monitor Graph for 1 week			1	13	14
16		Monitor Graph for 1 path			1	3	4
17		Monitor Diagram				1	1
18	Graph at Trouble Time	Graph at Trouble for 1week			1	Examining	1
19		Graph at Trouble for 1 path			1	Examining	1
	Total		277	1	21	81	103

6.5 Scale of knowledge database in ISACS-DOC

ISACS-DOC diagnoses the spacecraft on the basis of a knowledge database. It is still under the way to develop ISACS-DOC for MUSES-C, the knowledge database is getting larger.

Table 1 shows the scale of the knowledge database on February 2003. The questions are the items to be checked automatically. The nodes of results are the troubles to be listed. The scale of the knowledge database will become larger than as shown in table 1 when ISACS-DOC starts to work after MUSES-C launched on May 2003.

6.6 Difference from previous ISACS-DOCs for NOZOMI or GEOTAIL

ISACS-DOC for MUSES-C differs from previous ISACS-DOCs for NOZOMI or GEOTAIL in the points as follows.

(1) Knowledge database

The knowledge databases of ISACS-DOCs for NOZOMI or GEOTAIL are classed at first according to the sub-systems of the spacecraft, such as ‘the diagnosis of the communication system’, ‘the diagnosis of the power control system’, etc.

However, the knowledge database of ISACS-DOC for MUSES-C is classed at first according to the types of data needed, such as ‘the diagnosis with the ground data’, ‘the diagnosis with the telemetry data’, etc. ISACS-DOC for MUSES-C diagnoses using the data can be used at that time.

(2) Trigger of diagnosis

If the ground data are given, ISACS-DOC for MUSES-C starts to diagnose without the real time telemetry data. ISACS-DOCs for NOZOMI or GEOTAIL also use the ground data but they wait for the telemetry data to start the diagnosis.

(3) Period of the data used for a diagnosis

ISACS-DOC for MUSES-C diagnoses using the telemetry data recorded in the onboard data recorder for one week. The reproduced telemetry data for one week are downloaded, and ISACS-DOC for MUSES-C diagnoses using them as deeply as the real time telemetry data. ISACS-DOCs for NOZOMI or GEOTAIL diagnose using the data for one tracking path (for about 5-8 hours).

6.7 Details of ISACS-DOC

Although ISACS-DOC has eighteen monitors and more than 100 troubles to infer as results, we will introduce a few typical examples here.

(1) Report-packet monitor

Report-packet monitor of ISACS-DOC for MUSES-C is shown in figure 3.

On the report-packet monitor, ISACS-DOC extracts the key actions of the spacecraft in recent one week from the database of report - packet information, sorts them according to

their TI-time, classes them according to their danger-level, then displays them not in codes but in words. It is important to show the key actions of the spacecraft timely in the easy way to understand. The report packet monitor helps to solve the operational problems (d) and (g).

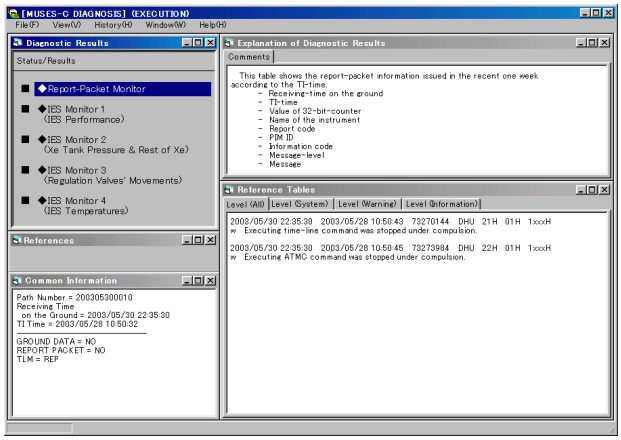

Figure 3 Report-Packet Monitor of ISACS-DOC for MUSES-C

(2) Range-rate monitor

On the range-rate monitor, ISACS-DOC monitors the difference between the measured range-rate and the expected value. The range-rate monitor helps to solve the operational problem (a).

To determine the trajectory of MUSES-C, the range-rate is measured using MGA almost all the time during the spacecraft can be seen from the ground station. So we can get the measured values of range-rate throughout the tracking path. The expected values of range-rate are calculated from the latest trajectory plan. The range-rate monitor draws the graph of the difference taken the expected range-rate from the measured value at the present path on the horizontal axis of the receiving time on the ground. To improve the precision of the range-rate monitor, the measured and expected values of range-rate are compared on the exact time with careful consideration to the communication delay time. We aim to improve the precision of the expected range-rate more exactly than the order of a few 10 cm/sec that we realized for NOZOMI.

Although the range-rate monitor shows whether the spacecraft keeps its planned trajectory, it is also helpful to know the health of the range-rate measurement system. If the measured value of range-rate suddenly fails on the large scale, we can guess that the range-rate measurement system might have some troubles.

(3) IES monitor 2 (monitor of the pressure of the xenon tank and the rest of the xenon)

IES monitor 2 of ISACS-DOC for MUSES-C is shown in figure 4.

On the IES monitor 2, ISACS-DOC monitors the pressure of the xenon tank and the rest of the xenon. The xenon is the propellant of IES. The rest of the xenon is calculated from the pressure and the temperature of the xenon tank using the program “nist12” that computes thermo-physical properties of 17 pure fluids. The IES monitor 2 draws the graph of the pressure of the xenon tank and the rest of the xenon for one week on the horizontal axis of TI-time. It is very important to watch the pressure of the xenon tank and the rest of the xenon because we could not help giving up the mission if the xenon leaks out, unfortunately.
The IES monitor 2 helps to solve the operational problem (c).

To solve the operational problem (c), ISACS-DOG also has the IES monitor 1 (monitor of the running performances of IES), the IES monitor 3 (monitor of the regulation valves of IES), and the IES monitor 4 (monitor of the temperatures of IES).

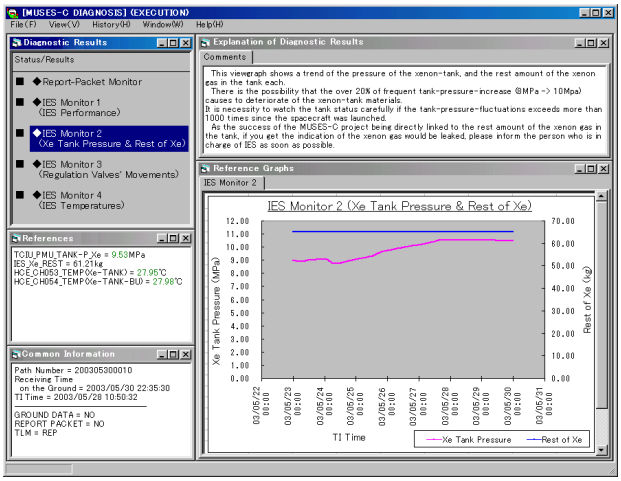

Figure 4 IES Monitor 2 of ISACS-DOC for MUSES-C

(4) Others

In addition to the above-mentioned, ISACS-DOC has other monitors and the trouble-items inferred as the diagnostic results, and they help

to solve the operational problems we discussed in the Chapter 4.

The communication links monitor 1 (down links) helps to solve the operational problem (f).

The power control monitor 1 (monitor of the voltages and currents of power control system) and the trouble items in the power control system help to solve the operational problem (d).

To solve the operational problem (e), ISACS-DOG also has the Reaction Control System (RCS) monitor 1 (monitor of the pressures and the temperatures of the RCS tanks), the RCS monitor 2 (monitor of the temperatures of the thruster valves), the RCS monitor 3 (monitor of the temperatures of the thruster injectors), the RCS monitor 4 (monitor of the temperatures of the inject-discharge valves), and the RCS monitor 5 (monitor of the temperatures of the pipes and the gas valve modules).

7.Estimations – How ISACS-DOC solves the operational problems

As we described in the Chapter 6, ISACS-DOC helps to solve the operational problems discussed in the Chapter 4. Particularly for the key items such as the range-rate and the pressures of the RCS tanks, ISACS-DOC calculates expected values of them, compares the expected and measured values, and watches them carefully with precision. The receiving levels of the communication links are displayed in the easy way to understand as a step before launch.

We believe that ISACS-DOC is useful to solve the operational problems and it will help to keep MUSES-C safe.

8.Conclusions and future directions

After MUSES-C is launched, we should tune ISACS-DOC up to the actual conditions.

We consider that these two functions as follows would improve the usefulness of ISACS-DOC. One is to provide the diagnostic results on the network, that the parties can see the results on their PC without going to the control room. The other is to mail the history of the diagnosis in a batch mode by the reproduced telemetry data for a week to the persons concerned, that they can quickly get the results from one-week telemetry data looked over carefully.

For a deep space probe, it is important to catch the early signs of the troubles, so we would like to continue to improve the precision of diagnosis and watch the spacecraft with high-level estimation. We also would like to mine the data used for diagnosis and accumulated daily to catch the early signs of the spacecraft's trouble on our diagnostic expert system.

Acknowledgments

We wish to thank many people who have contributed to ISACS-DOC for MUSES-C, especially Professor Kawaguchi Junichiro (ISAS) for his understanding and support. We would like to thank Professor Toki Kyoichiro, Associate Professor Kuninaka Hitoshi, and Research Associate Nishiyama Kazutaka (ISAS) for providing the necessary information of the Ion Engine System. We also thank Associate Professor Sawai Shujiro for providing the necessary knowledge of the Reaction Control System, Associate Professor Hashimoto Tatsuaki (ISAS) and Mr. Uo Masashi (NTSpace) for helpful advice of the Attitude and Orbit Control System, and Mr. Oshima Takeshi, Mr. Shigemoto Noboru (NTSpace) for providing wide-range knowledge of the common instruments of MUSES-C.

References

Hashimoto, M., Choki, A., Nishigori, N., and Mizutani, M.: Basic Concept of Monitoring and Diagnostic Expert System for MUSES-C, *Proceedings of the 22nd International Symposium on Space Technology and Science*, ISTS 2002-F-17, 2002.

Nishigori, N., Hashimoto, M. and Mizutani, M.: Fully Automatic and Operator-Less Anomaly Detecting Ground Support System for Mars Probe "NOZOMI", *Proceedings of the 7th International Symposium on Artificial Intelligence, Robotics and Automation in Space*, i-SAIRAS THU-PM1-C, 2001.

Hashimoto, M., Nishigori, N., and Mizutani, M.: Running Status of Monitoring and Diagnostic Expert System for Mars Observer "NOZOMI", *Proceedings of the 22nd International Symposium on Space Technology and Science*, ISTS 2000-f-08, 2000.