Proceeding of the 7th International Symposium on Artificial Intelligence, Robotics and Automation in Space: i-SAIRAS 2003, NARA, Japan, May 19-23, 2003

Sample Cartridge Automatic Exchange Mechanism for JEM multi user facility (GHF)

Hirochika Murase ,Tai Nakamura (NASDA)
2-1-1 Sengen, Tsukuba, Ibaraki, 305-8505, Japan
murase.hirochika@nasda.go.jp

Keywords space automation, Japan Experiment Module (JEM, Kibo), multiuser experiment facility, Gradient Heating Furnace(GHF), Sample Cartridge Automatic Exchange Mechanism (SCAM)

1. Abstract

GHF is one of multiuser experiment facilities, which is being developed to satisfy various needs of researchers so that it can be used to conduct a variety of experiments. Five experiment racks containing Japanese equipment, a Freezer Refrigerator rack to store experiment samples and medicine, and stowage racks to store experiment samples and equipment are available in Japanese Experiment Module "Kibo" pressurized module. GHF is installed in the one experiment rack.

GHF is the experiment facility for investigating crystal growth, and gaseous phase [1] growth of semiconductors under microgravity. It is a multi-user furnace consisting of the Material Processing unit (GHF-MP), which directly operates the heating and cooling process of samples, the GHF Control Equipment (GHF-CE), which controls the overall operation of the GHF and communicates with Kibo, the Sample Cartridge Automatic exchange Mechanism (SCAM), which can automatically exchange 15 Sample Cartridges(maximum), and the SCAM Control Equipment (SCAM-CE). GHF-MP has three independent heating zones that can provide various temperature profiles in accordance with the experiment requirements under vacuum conditions. This furnace has the capability of directional solidification [2] of samples. In order to conserve crew resources on orbit, the Sample Cartridges are automatically exchanged by SCAM. Ten channel thermocouples (maximum) allow measurement of the sample temperature distribution.

Especially SCAM is one of a few automated apparatus for International Space Station, and is developed for the purpose of mitigating crew operations on the orbit.

When the same experiment was conducted using a space shuttle, it was realized that setting a cylindrical cartridge with sample in the equipment correctly under microgravity was a difficult work beyond anticipation.

This paper focuses on SCAM(See Figure-1), and introduces the design outline, operations, and autonomous features.

2. Introduction

GHF was developed by Ishikawajima-Harima Heavy Industries Co. as the manufacturer. The design of PFM was started from 1996 and was delivered to NASDA in 2000. The safety review of GHF by NASDA and NASA was completed in August, 2002.

The rack integration test which installed GHF in the experiment rack has been conducted since April,2002.

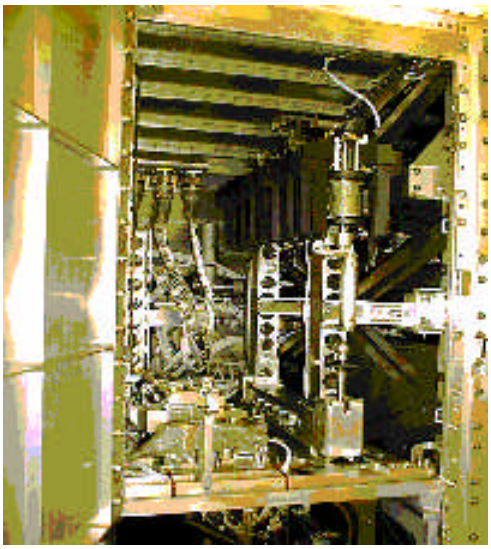

Figure-1 SCAM overview

[1] The phase in which gas and solid are mixed in the cartiridge.

[2] Propagational solidification method of melting material in one direction.

3. SCAM outline

SCAM consists of Magazine, Arm , Clamp. Besides, Arm consists of three components, those are Vertical Arm , Horizontal Arm and Hand. Each function is shown below and the outline of SCAM is shown in Figure-2.

Magazine

- To store 16 sample cartridges(including the cartridge used as a lid) in the holder.

Arm

- Vertical Arm:To extract/insert a cartridge from/to GHF-MP and carry a cartridge vertically.
- Horizontal Arm:To carry a cartridge horizontally.
- Hand:To grip a cartridge.

Clamp

- To fix a cartridge and seal up GHF-MP.

All components are driven by DC motors and positioned precisely based on the information from resolvers/micro switches. SCAM-CE controls all the motors according to the output of micro switches in SCAM through the commands from GHF-CE. SCAM control diagram is shown in Figure-3. Payload Data Handling unit(PDH) is used for the communication(MIL-STD-1553B) between JEM system and GHF-CE. Payload Power Distribution Box(P-PDB) supplies main power to GHF-CE. SCAM-CE has the following functions.

SCAM-CE

- To perform BIT(Built In Test) by GHF-CE command.
- To initialize software mode, when power is resumed after shut down.
- To be supplied with electrical power from GHF-CE.
- To supply power to SCAM.
- To convert and collect data from sensors of SCAM.
- To control SCAM by the software logic in SCAM-CE based on the command from GHF-CE.
- To have current limit function in less than 32VDC lines.
- To detect the fault and send the fault message to GHF-CE

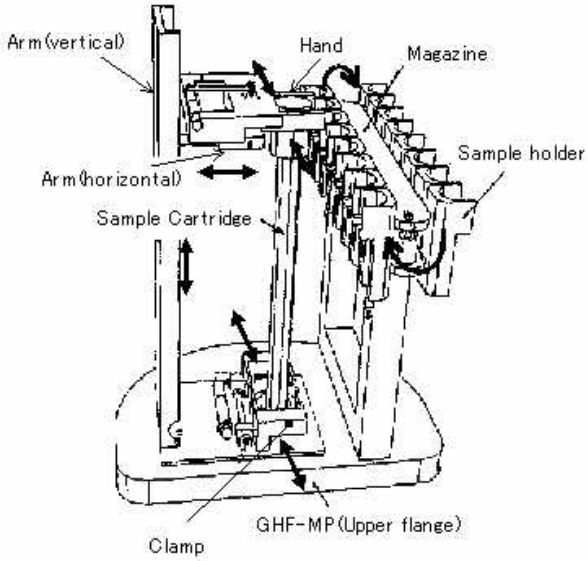

Figure-2 SCAM configuration

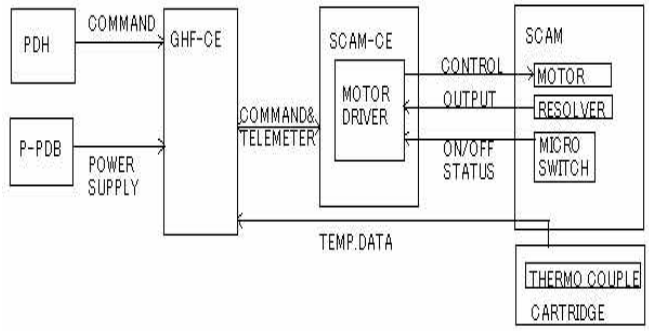

Figure-3 SCAM control diagram

4. SCAM operations

SCAM-CE has five operational modes as SCAM operations shown in Figure-4. When SCAM-CE is supplied electrical power, its mode changes to Ready via Initialize. SCAM is operated by the GHF-CE command from Laptop/GHF-CE front panel/Ground operation. According to operation, the mode changes to Operation/Apparatus check from Ready. Each SCAM-CE mode is described below.

1)Initialization

By power supply, SCAM operation is changed to this mode. Initialization of memory and interface board, Check of SCAM-CE/SCAM status are performed. Especially in the check of SCAM status, SCAM-CE gets the status of micro switches and memorize the temporary position of each component according to the data defined beforehand.

2)Ready

The state of apparatus is maintained until it receives an operational command.

3) Apparatus check

After checking the health and status of SCAM-CE, This mode can be used in order to check the health and status of each component function to each command.

4)Operation

This mode is divided into the two modes. One is the autonomous operation, which can automatically perform a sequence of cartridge exchange. Another is the arbitrary operation, which can automatically operate a group of components as a specific function.

5)End process

SCAM is powered off by GHF-CE.

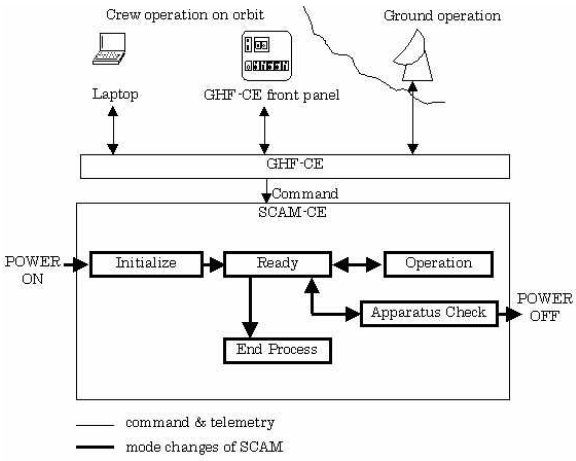

Figure-4 SCAM operations

5. Autonomous features of SCAM

If even a command is transmitted to SCAM-CE via GHF-CE, SCAM can automatically carry out all operations from Extraction of a used cartridge to Installation of a new cartridge. Crew operation is only setting a cartridge to SCAM. The sequence of autonomous operations is shown in Figure-5.

Cooperation between Magazine, Arm, and Clamp is very important for this autonomous operation. Because each component is independent on a mechanical interface respectively. Therefore the operation progresses step by step, checking a mutual state between each component.

The main autonomous features are shown in Table-1. It is sufficient specification to reproduce the precise work by people.

In this automation, realization of the function especially shown by hatching of Figure-5 was a key. The outline of such key technology is introduced to below.

Positioning (Arm/Clamp)

Magazine, Arm, Cramp are driven by DC motor using belt or ball screw. For Hand and Cramp, the ball screw mechanism is adopted for improvement in position accuracy. Positioning/position detection is performed based on the information from micro switches/resolvers.

The cartridge is installed into GHF-MP such as Figure-6. As it is heated in a vacuum by the radiation from a heating unit during an experiment, it should not contact with the heating units of GHF-MP. Therefore, each heating unit is positioned on the particular arrangement, which can be a guide for a cartridge during the installation.

The motors are controlled so that the cartridge can move smoothly based on the defined rate timetable from the starting point to the destination.

Clamping mechanism

Clamp has both of mechanical and electrical interface. D-sub connector is electrically mated while a cartridge is mechanically fixed to GHF-MP, and GHF-MP is sealed up. In case of the standard cartridge, the clamping enable it to communicate with SCAM-CE. On the other hand, when the clamp is canceled, electrical connection is demated prior to mechanical connection. Also the differential pressure between GHF-MP inner and the outer gas is released before that the mechanical interface is perfectly disconnected. Refer to Figure-7.

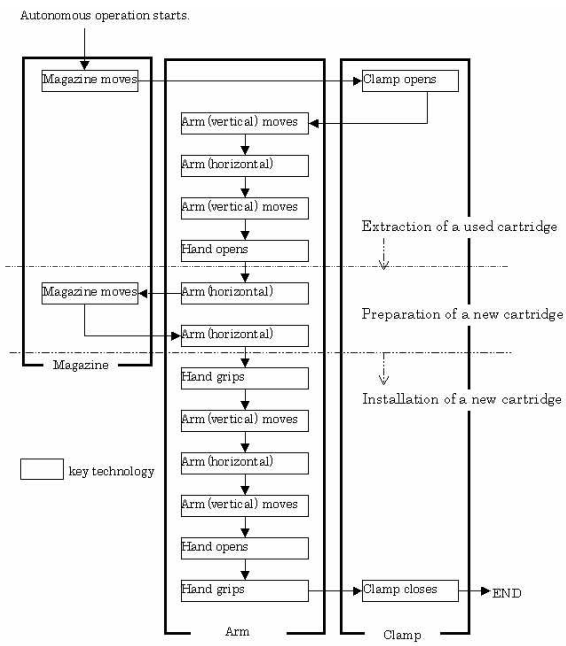

Figure-5 the sequence of autonomous operations

Table-1 Features

Item	Spec.
Cartridges storage Arm stroke	Max. 15 cartridges 65mm (Horizontal) 555mm (Vertical)
Move rate Magazine Arm(vertical) Arm(horizontal)	Max.17mm/sec Max.12.4mm/sec Max.5.5mm/sec
Positioning accuracy	Max. Φ 2mm @the end of a sample
Standard cartridge spec. *except the connector	Max. 6kg 36mm (Diameter) 505mm* (Length)
The time required for cartridge exchange	Less than 15 minutes (Nominal)

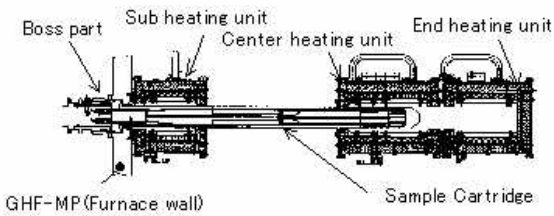

Figure-6 Sample cartridge in GHF-MP

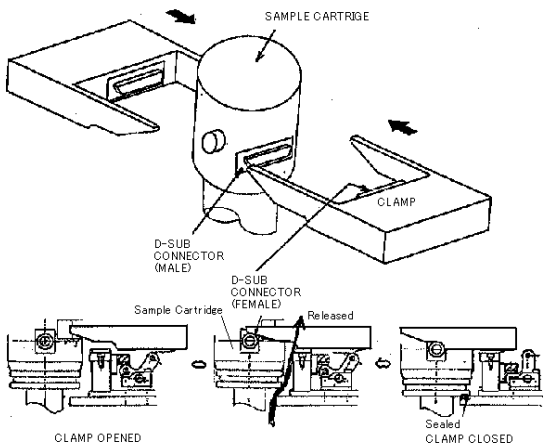

Figure-7 Clamping mechanism

6. Safety feature for SCAM

Hazard analysis for GHF has been performed according to the requirement documents related to International Space Station(ISS). The safety features related to SCAM are described below.

Rotating mechanism

The motor of SCAM rotates at nominal 1500rpm(Max.3000rpm). Rotors will be contained in metallic structures which can withstand the impact/force of fragments of rotors. The revolutions of the rotors are also controlled by SCAM-CE. Potential hazard is entanglement of crew hands in SCAM. This hazard will be controlled by the following measures. SCAM rotating devices can not be contacted normally by crew because SCAM motor is not powered on during SCAM front door panel is opened. Also the force produced by SCAM magazine is smaller than crew force(estimated at 3kg) and a crew can stop SCAM even if a crew is rolled up.

Human interface

GHF has a SCAM front door panel which prevents crew from inadvertent touching high temperature parts and rotating parts. The SCAM front door panel has interlock switch and solenoid lock to close the front panel while the cartridge is hot.
Motor power is cut off linked with SCAM front door status. When the SCAM front door panel opened, SCAM motor power is never supplied. SCAM is allowed to be driven only during the front door closed.
If SCAM fails to install a sample cartridge and stops or the solenoid lock is failed, the solenoid lock is able to be removed by unfastening several fasteners after the main power(P-PDB) power off.

Collision avoidance

At the time of exchange of cartridge, SCAM only has a GHF-CE software control against collision of the cartridge. But SCAM motors are limited by electrical current so that SCAM never break the cartridge.

EMI evaluation

SCAM has low power devices like motor, sensor and LED. SCAM power is very low(less than 23W) compared with GHF system level.

7. Conclusion

- SCAM is one of a few of the apparatus automated for International Space Station, and has various functions demanded.
- SCAM is designed enough in consideration of safety and reliability.
- All the functions of SCAM was verified to satisfy the requirements by some tests/analysis.