LUVMI: A CONCEPT OF LOW FOOTPRINT LUNAR VOLATILES MOBILE INSTRUMENTATION

Jeremi Gancet(1), Diego Urbina(1), Karsten Kullack(2), Philipp Reiss(3), Janos Biswas(3), Simon Sheridan(4), Simeon Barber(4), Neil Murray(5), Joseph Rushton(5), Lutz Richter(6), Diana Dobrea(6), Joseph Salini(1), Hemanth Kumar Madakashira(1), Shashank Govindaraj(1), Richard Aked(1), Leonardo Surdo(2), Enrico Ceglia(2), Craig Pitcher(4), Anthony Evagora(5), Mattia Reganaz(6)

(1) Space Applications Services NV, Leuvensesteenweg 325, 1932 Zaventem, Belgium,
Email: jeremi.gancet@spaceapplications.com
(2) Space Applications Services NV, Huygensstraat 34, 2201 DK Noordwijk (ZH), The Netherlands
Email: karsten.kullack@spaceapplications.com
(3) Technical University of Munich, Institute of Astronautics, Boltzmannstr 15, 85748 Garching, Germany
Email: j.biswas@tum.de, p.reiss@tum
(4) Open University, Walton Hall, Kents Hill, Milton Keynes MK7 6AA, UK
Email: simon.sheridan@open.ac.uk
(5) Dynamic Imaging Analytics, Bletchley Park Science and Innovation Centre, Milton Keynes MK3 6EB, UK
Email: neil.murray@dynamicimaginganalytics.co.uk
(6) OHB System AG, Manfred-Fuchs-Str. 1, 82234 Wessling, Germany
Email: lutz.richter@ohb.de

ABSTRACT

The International Space Exploration Coordination Group (ISECG) identifies one of the first exploration steps as in situ investigations of the Moon or asteroids. Europe is developing payload concepts for drilling and sample analysis, a contribution to a 250kg rover as well as for sample return. To achieve these missions, ESA depends on international partnerships.

Such missions will be seldom, expensive and the drill/sample site selected will be based on observations from orbit not calibrated with ground truth data.

Many of the international science community's objectives can be met at lower cost, or the chances of mission success improved and the quality of the science increased by making use of an innovative, low mass, mobile robotic payload following the LEAG recommendations.

As a main objective LUVMI is designed specifically for operations at the South Pole of the Moon with a payload accommodated by a novel lightweight mobile platform (rover) with a range of several kilometers.

Over the 2 years duration of the project, the scientific instruments payload will be developed and validated up to TRL 6. LUVMI targets being ready for flight in 2020 on an ESA mission partially supported by private funding.

1. CONTEXT AND MOTIVATION

Future long-term lunar exploration efforts will rely heavily on in-situ resource utilization to produce mission consumables, fuel or even structures on the lunar surface and, thus reduce transportation cost. One of the most interesting resources available at the Moon are loosely bound (physisorbed) volatiles found in or around cold traps near the lunar poles.

Recent years have seen several remote observation missions that have searched for evidence of lunar water. Clementine [6] and Chandrayaan-1 [5] have performed radio-wave reflection measurements, with results consistent with the presence of water. Other orbital measurements, including the LOLA laser altimeter of LRO [4] and measurements of epithermal neutron emissions [3] have yielded inconclusive results that suggest water may be present but does not necessarily coincide with Permanently Shadowed Regions (PSRs). So far the only direct observation of lunar water was performed during the LCROSS experiment, when the ejecta plume of an impactor in the Cabeus Crater of the lunar south pole was observed and a water content of 5.6 +/- 2.9 wt% was detected [1].

The next logical step in lunar volatiles exploration is the in-situ investigation around or even inside a PSR, which will provide a definite answer to the question of the existence of lunar water and provide ground truth data for the calibration of orbital measurements.

1.1. ISECG Objectives

LUVMI addresses top priorities established [1] by the Lunar Exploration Analysis Group (LEAG) Volatiles Specific Action Team (VSAT). These are:

1. Determining the variability of volatile distribution
2. Identification of the chemical phase of volatile elements
3. Analysis of physical and chemical behaviour of lunar soil with temperature

4. Determining geotechnical properties
5. Determining current volatile flux

The LEAG VSAT concluded that a mobile payload with capability to access depth of 20cm would properly address the 4 first priorities, while partially addressing the 5th one. Only a drilling capability with depth exceeding 1 full meets the 5 priorities, but this comes at a high cost in terms of mass, energy and time.

The LUVMI concept is based on that analysis, aiming to develop an affordable, compact mobile payload with 20cm deep sampling capability, therefore addressing the biggest share of these LEAG VSAT priorities.

1.2. Flights Opportunities

The LUVMI system is designed to fly as a secondary payload on one or several missions planned to land on the Moon. In principle it can be delivered both as a single payload; as a piggy-back payload accompanying a major, primary payload; or as a group of multiple LUVMI payloads on the same lander.

No particular mission is targeted yet. Instead the technical concept has been conceived such that it is compatible with at least 80% of the currently intended or planned missions, thereby providing sufficient flexibility to identify and down-select one or several flights later in the project. To this end a survey of currently planned missions from various countries was performed, and the information used to build an envelope of main technical requirements (maximum dimensions, mass limit, etc.) that would allow to accommodate LUVMI on most of those landers. This approach provides sufficient confidence and margin to be able to fit LUVMI also on new flight opportunities in the future, that are not on the map yet. The list of missions used to build this enveloping requirements includes:

- Chang'e 4, 5, and 6 of China
- Luna-25, -27, -28, and -29 of Russia
- NASA's Resource Prospector
- commercial 'Peregrine' lander, led by US industry.

In addition to the above opportunities the Canadian Space Agency (CSA) is studying a lunar rover, the Japanese Aerospace Exploration Agency (JAXA) is studying a lunar lander, ESA is considering contributions to a joint Lunar Polar Sample Return mission, and the Korean Aerospace Research Institute (KARI) is studying lunar surface payloads for launch at some future time.

A common criterion for potential "host lander missions" is a landing at preferably more than 80 degrees latitude of the Moon, in order to get the instrument package as close to the areas of interest as possible. Once landed and deployed, the LUVMI system will operate independent from the lander and its primary payload.

2. MISSION, OPERATIONS AND REQUIREMENTS

2.1. Mission Baseline and Scientific Objectives

The primary scientific objectives of LUVMI are to (a) detect and roughly quantify the abundance of loosely bound volatiles over a range of locations in the lunar polar regions and in the shallow subsurface, (b) identify the chemical phase of detected volatiles, (c) investigate the migration of volatiles over the lunar surface, and (d) determine relevant engineering properties of the lunar regolith in the polar regions. The primarily targeted volatile component is water. LUVMI shall be able to distinguish between free water (ice frozen into / onto the regolith) and water which is chemically bound in the mineral phase. In addition to water, the specific volatiles observed in the LCROSS Cabeus crater plume shall also be targeted: H_2S, NH_3, SO_2, C_2H_4, CO_2, CH_3OH, CH_4.

LUVMI is intended as a possible secondary payload to a lunar landing mission. Preliminary requirements for the landing site are:

- Solar illumination >40 % of lunar day/night cycle
- Distance between landing site and PSR <1 km
- Earth visibility >40 % of lunar day/night cycle
- No major obstacles in 250 m radius

Several locations of interest have been characterised for the operation of LUVMI in terms of their scientific potential:

- Vicinity of the landing site: Measurement of possible volatile species and contamination from the lander exhaust with depth profiles within 10 m of the landing site.
- PSR: At least three depth profiles of volatiles shall allow a spatial and depth resolution of volatiles in PSR. The latter are defined as areas with now solar illumination at latitudes >80°, with surface temperatures <100 K, and where supportive remote sensing data suggests enhanced water/hydrogen concentration.
- Vicinity of PSR: Depth measurements shall be performed in defined distances from the PSR boundary to characterise the impact of gardening processes on the distribution of volatiles.
- Location with regular illumination: The abundance of volatiles near the lunar poles, at sites with an illumination of 10% to 70% of the lunar day/night cycle shall be measured to help the understanding of their accumulation processes.
- Non-permanent shadow behind small obstacle/boulder: Depth profiles shall be taken in illuminated areas as well as nearby non-permanently shadowed areas to assess the accumulation of volatiles in colder areas over time and space.

- Night to day termination event: The release of volatiles during a transition from night to day shall be measured at locations with particularly sharp transitions, e.g. slopes.

2.2. Concept of Operations

The initial surface operation planning is driven by finding the best compromise between engineering constraints (power, range, speed) and science goals (number of individual samples), though it may evolve as information on landing site options are considered. The main operations to be performed on the surface include the following:

- Post landing check-out
- Rover egress
- Landing site survey
- Wide field area survey / prospecting (volatile hot-spots)
- Terminator passage
- PSR sampling

The baseline operations assume a short 14 day mission lifetime and are not assuming any particular landing site. The baseline operations consider a notional location with a number of nearby PSRs (~ 1 to 2 km from the landing site). In this scenario, the key objectives would be to conduct operations in an increasing order of risk to allow science measurement to be obtained at an earliest opportunity prior to performing operations that may be deemed to pose a risk to the rover, such as egress into shadow, egress into PSR and drilling into the regolith.

Before leaving the landing platform, the state of the rover is determined by performing a systems check for each instrument. The rover will then drive onto the lunar surface, during which background measurements will be made by the Surface Imager instruments and Volatiles Analyser (VA), to investigate how the thermal and mechanical inputs to the regolith caused by the motion of the lander affects volatile release.

An understanding of the nature and extent of contamination and alteration of the lunar surface resulting from the action of the lander's motors during descent will be of great importance to follow on missions and in particular those without a mobile element. In these follow-on missions, where it is likely that the Lander's robotic arm will not be able to access uncontaminated regolith, an understanding of the distribution of contamination and empirical data on how the volatiles evolve with time is a high priority. An early conducted landing site survey will target (i) Determination of the volatiles' content as a function of lateral distance from Lander to investigate decline in alteration with distance and (ii) measurement of the volatiles as a function of depth which will address the penetration of volatiles. If there is a rock or boulder in the vicinity, another test will be performed to study how it shields the surface from contamination.

If a suitable location is found that has an illuminated region and an area which has temporary shadow, such as behind a rock, a series of measurements will be made using the Volatile Analyser (VA) and Volatile Sample (VS) to investigate the variation in the volatiles' content at both a spatial and temporal level.

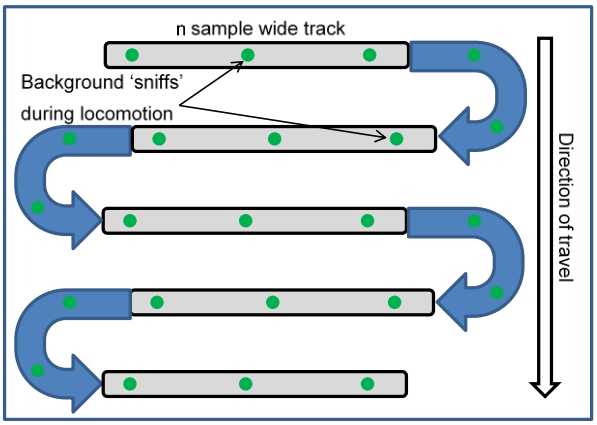

Figure 1: Raster-type sampling strategy for performing a wide area survey for volatile-rich hot spots

To conduct a wide area study and prospect for volatile-rich hot spots, LUVMI will traverse a large area and conduct a number of rapid measurements as it travels, shown in Figure 1. Background measurements will map volatiles liberated by illumination and/or mechanical perturbations. When detecting a volatile-rich area, LUVMI will cease traversal and conduct a number of vertical survey measurements. LUVMI will also be directed to PSRs to perform additional surveys.

2.3. Preliminary Architecture

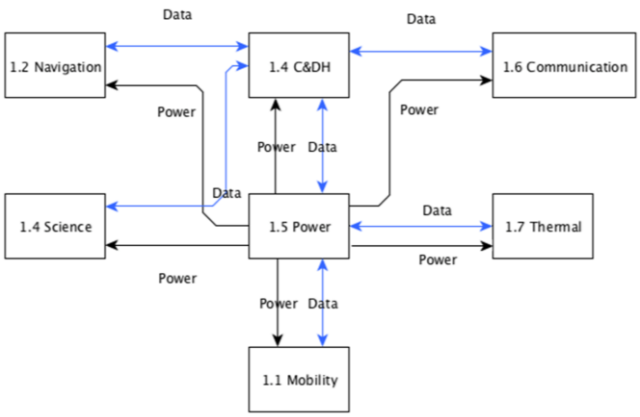

Figure 2: LUVMI physical reference high level architecture (data and power interfaces)

The LUVMI reference architecture encompasses a total of 7 subsystems (Figure 2), addressing the functions established by the Science Requirements and the Concept of Operations that were produced earlier in the project.

A trade-off analysis of the different options and

characteristics for the subsystems was done based on this breakdown, to obtain a baseline architecture.

Associated to this, a parametric model was developed to simulate the impact of different assumptions and configurations. Related topics include system engineering budgets (mass, power, data and processing, thermal, RF link…), mission operation modes and power consumption, timeline of operations (taking into account e.g. illumination), as well as sub-systems specification and design considerations.

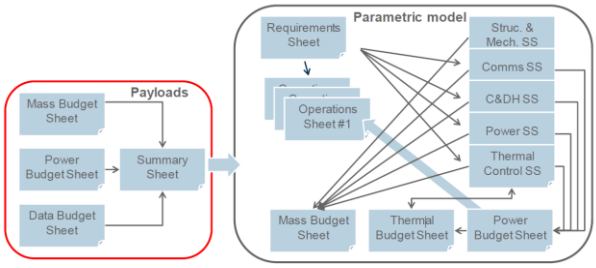

Figure 3: APPS workflow

The parametric model is an adaptation of the ESA APPS [13] (Figure 3) study to rover considerations.

The following sections focus on the volatile sampling and analysis instruments, and the rover platform mechanical design.

3. VOLATILES SAMPLING AND ANALYSIS INSTRUMENTS

3.1. Volatiles Sampler

The Volatiles Sampler is a novel instrument that combines drill, sample handling and preparation, gas extraction and gas analysis in a small and compact unit.

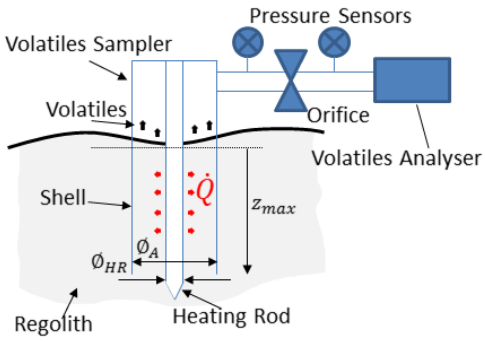

Figure 4: Concept sketch of the Volatiles Sampler

The concept is shown in Figure 4: A central heating element and the surrounding drill shell are inserted up to 20 cm into the regolith. The heating rod then heats the enclosed regolith sample to release any bound volatiles. While some of the released volatiles are lost through the open bottom of the shell, around 50% (Parzinger 2013) are able to pass through the measurement orifice at the top of the instrument and into the Volatiles Analyser. The orifice allows a rough estimation of the amount of released volatiles, while the VA performes a detailed chemical characterisation.

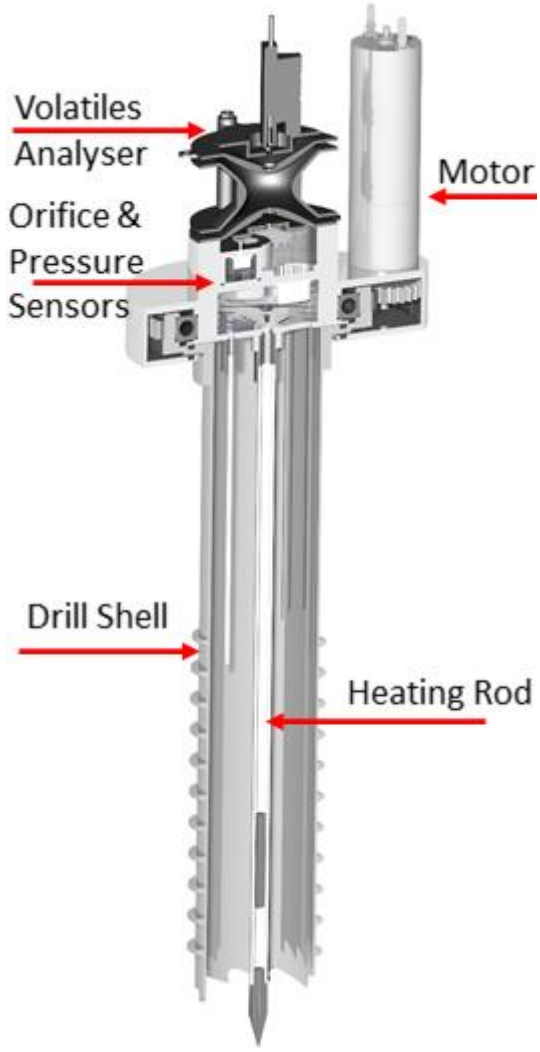

Figure 5: CAD model of the integrated Volatiles Sampler and Volatiles Analyser

Figure 5 shows a CAD section of the VS. It features a rotating drill shell that reduces the necessary vertical force during insertion to less than 30 N. The entire instrument mass is less than 1.5 kg. The rotation of the shell will be provided by the motor, which transmits the Torque using a drivetrain. A ball bearing allows a free relative motion between the static and the dynamic part. To avoid any lack of volatiles and a penetration of lunar dust into the mechanism, sealings are interposed between the moving parts to fix the interstices and ensure the function of the mechanism. The shell will be provided with a system that removes the internal remaining soil avoiding the contamination of later samplings. To allow a proper penetration, the rotation rate is synchronized with the insertion speed according to the pitch of the

thread, granting a proper sampling.

3.2. Analyser

Mass spectrometry is often referred to as the gold standard technique in terrestrial laboratories for the determination of the elemental, isotopic and molecular composition of sample material. Mass spectrometers form the integral parts of many spacecraft payloads such as the ultra-light (Ptolemy) and static vacuum (Beagle 2 GAP) mass spectrometer based instrumentation designed for in situ geochemical analysis. Ptolemy, an ion trap based gas-chromatograph isotope ratio mass spectrometer on-board the Rosetta Lander [8] and [9] returned the first measurements of organic material from the surface (and near surface) of comet Churyumov-Gerasimenko in November 2015. GAP, a magnetic sector mass spectrometer on-board the Beagle 2 lander [10] was the instrument aimed at performing in situ surface, subsurface measurements on Mars. For the Moon, current data are mostly limited to inferences from orbital data sets which are equivocal and at poor spatial and depth resolution. In addition the LRO spacecraft observed the impact of a spent Centaur rocket stage into Cabeus carter and inferred the presence of a few percent water ice but again data are not conclusive. The UK-led MoonLite mission [11] proposed the use of a high speed penetrator deployment system to deliver a mass spectrometer instrument which would measure and characterise the volatile content at the penetrator impact site. Unfortunately the MoonLite mission did not progress past the study phase and the mission is no longer in planning.

The mass spectrometer selected for the LUVMI Volatiles Analyser is an ion trap mass spectrometer instrument based on the Ptolemy flight-proven instrument (Figure 6) and the MoonLite penetrator deployable instrument. The VA will address the scientific objective of identifying and the quantification of volatiles contained in the lunar regolith, at a number of regions near the lunar pole. The ion trap device offers a mechanically simple, low mass, volumetrically compact instrument that is capable of rapid detection of masses in the range of m/z 10 to 150 to extremely low detection levels making it ideal for detection of water and other volatiles that may be liberated from the lunar regolith by LUVMI. In combination with the Volatiles Sampler (Figure 5), these measurements will be made as a function of depth.

The ion trap mass spectrometer consists of a number of discreet subsections, these being:

- The ion source, consists of an electron source which ionises the sample gas(s) via electron bombard bombardment. In the Ptolemy instrument the electron beam is generated by a field effect ion source which uses micro-machined silicon nano tips to provide a low power electron beam. In LUVMI, the VA will use a Carbon Nano Tube electron source [5] that will offer higher emission currents, longer lifetime in a more rugged device.
- The mass selector is formed from three hyperbolic electrodes that form an electro potential region within their structure. By manipulation of the amplitude and/or frequency of the potential on the hyperbolic electrodes ions can be trapped or manipulated to eject them in order of their mass-to-charge ratio.
- The detector, which consists of an electron multiplier that detects individual ions as they leave the mass selector and through a process of amplification multiplies this extremely low current associated with single ions into signals that can be measured by the control electronics.

In addition to the VA mass spectrometer instrument, a reference gas system that store gases for in-situ calibration and soil permeability measurements will be included. The reference gas system utilises an OU gas valve that has been developed for space flight applications. The reference gas storage system gas at high pressure in a miniature pressure volume and allows extremely precise flows of the gas to be delivered to the instrument when required. In situ calibration during operation increases the scientific return of the instrument with regards to characterising the liberated volatiles over an extended time period. The new valve technology offers extremely low leak rate with extremely fast actuation times and low power requirements compared to previous technologies.

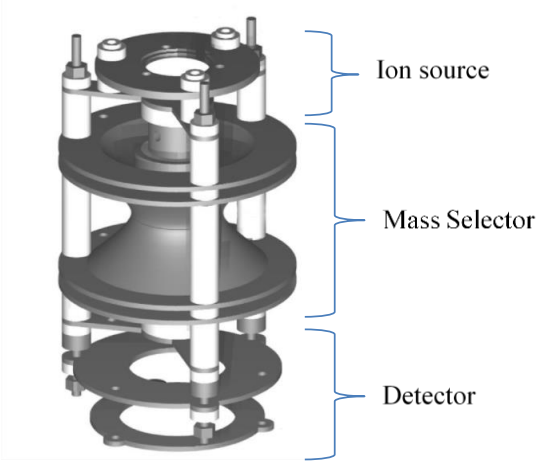

Figure 6: Ptolemy mass spectrometer unit consisting of the ion source, mass selector and detector

To date, water doped (10%) lunar simulant material has been prepared and is being characterised under vacuum (2×10-5 mbar) and low temperature (<140 ˚C) conditions using the in-house vacuum testing chamber. The aim of these early experiments is to determine how the material behaves under lunar like conditions and to provide a volatile rich test matrix for later mass spectrometer testing and evaluation.

4. MOBILE PLATFORM DESIGN

4.1. Preliminary design

The main goal of the mobile platform (namely the rover) is to bring the LUVMI instruments package into PSRs.

The flight concept can be decomposed in different subsystems. The first one in the chassis and mobility system. It represents the core mechanical assembly, on which all the other subsystems are assembled. The chassis should support and protect many components, including the instruments, from the harsh lunar environment (dust, radiation, temperature, etc.). Four "wheeled legs" are used to move the rover. Each of them can modify its angle to change wheel altitude, steer and drive independently. This allows stowing the rover in a compact configuration (cf. Figure 7), and lowering the chassis when deploying instrument, drilling and sampling regolith in PSRs.

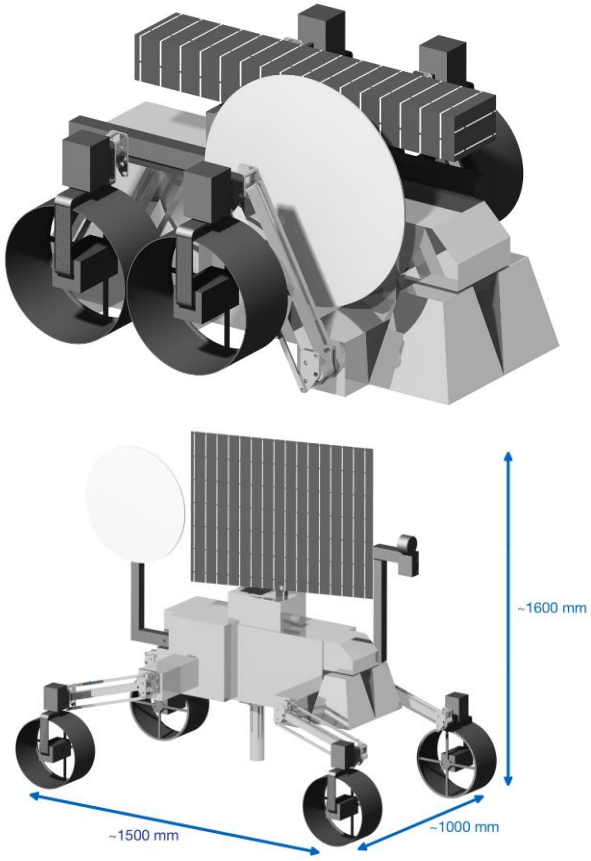

Figure 7: draft of LUVMI rover, in stowed and deployed configuration

The second subsystem is the navigation. Navigation sensors (IMU, Star tracker, imager, etc..) are used to perform SLAM (simultaneous localization & mapping) so that to enable a certain level of autonomy, while allowing to return useful information to remote operators for teleoperation purpose.

The science subsystem contains the LUVMI instrument package to characterize regolith in PSRs. These are mainly the volatiles sampling and analyzing instruments (cf. Section 3).

The power subsystem is responsible for providing energy to all components in the rover. The assumed time of operation is 14 days, part of it taking place in extreme cold and dark environments. Effective energy storage (e.g. Li-S based batteries) is essential to sustain such conditions, but this is insufficient for the whole duration of the mission. The rover shall therefore also rely on solar panels to recharge its batteries when moving in places exposed to sun light.

The communication subsystem gathers the components (high gain antenna, dual band transceiver, amplifier, steering mechanism…) that are required to establish a reliable communication link with the lander and the ground station on Earth. Both S-band and X-band transmission are provisioned.

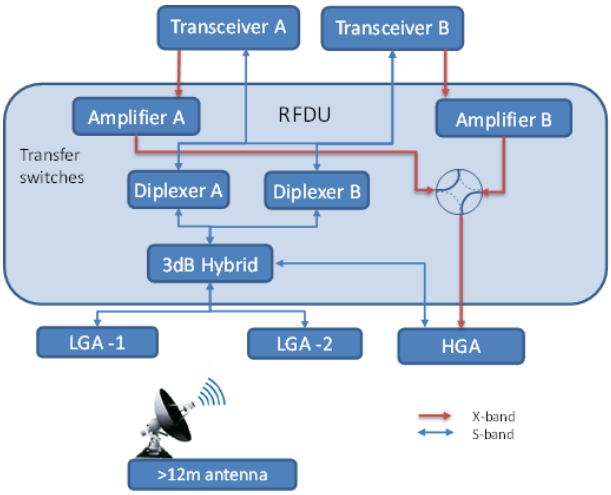

Figure 8: Communication architecture

Temperatures in PSR are very low (down to 40°K), so it is important to properly regulate subsystems temperature and provide where necessary sufficient heating. Reversely, in sunny places, the rover subsystems need being cooled down. The thermal subsystem therefore gathers radiators, heaters, combined with proper insulation (MLI / multi-layer insulation).

The Command and Data Handling subsystem includes of a space-grade on board computer (low power processor board, possibly OpenRISC FT or P400k, + FPGA for images processing) and SpaceWire bus. 32 GB of mass storage is provisioned.

As a follow-on step after the early design of the flight concept, a ground prototype model is under development. This ground model will be used to perform specific tests on Earth. Its overall design is quite similar to the flight concept one, but the testing conditions are obviously different. Many constraints are relaxed compared to the flight concept (earth temperatures range, no radiation, direct communication). Accordingly the ground model will implement the same subsystems as the flight concept, but with varying levels of fidelity (depending on

subsystems). For instance, the OBC shall not be space-grade, radiators and heater can be simplified or simulated, etc. The ground prototype will serve as a meant to validate the concept, and to support a series of tests with the science instruments.

4.2. Surface imaging instrument

The surface imaging instrument will provide visual information about the rover's environment. Data can be used by both the on-board navigation systems or by teleoperators on Earth.

The instrument will also acquire high quality imagery of the surface, mission equipment, and Earth. Additionally, the interaction of the rover and its instruments with the regolith can be visualised.

In line with the compact nature of the LUVMI rover, the power, mass and volume of the instrument will be kept low. The power requirement will be 4W peak for up to two sensors, not including illumination, the volume is expected to be below 50 mm x 50 mm x 200 mm per sensor, and the mass below 400 g per sensor. The instrument will be operational in the temperature range of approximately -240 to 320 K.

An aim of the surface imaging instrument is to use light-field imaging in space. Light-field typically uses a single image sensor, a Micro-Lens Array (MLA) and a main lens. The raw data is a set of sub-images. Using a single exposure an image can be refocused and depth information extracted. The LUVMI surface imaging instrument will be calibrated to allow the construction of 3D terrain maps using a single sensor, without an active focusing mechanism.

The LUVMI camera system will use the latest generation of space-qualified CMOS image sensors. The imaging system will provide ad-hoc functionality. Adjustable frame rates and Regions Of Interest (ROI) will be available to suit the mode of operation, e.g. teleoperations or science imaging.

CCDs dominate space imaging and CMOS has little heritage outside of star tracker applications. However, the high number of vendors, low power consumption, ease of integration and potential for radiation hardness make the use of CMOS image sensors attractive.

Development of the LUVMI camera system will require the miniaturization of light-field technology beyond what is currently commercially available, given the need for a large depth of field and high resolution. A further requirement will be related to the use of MLAs in the space environment.

To minimize the mass and volume of the camera systems, fixed camera mounts will be used where possible.

Artificial illumination will be available. The natural lighting from direct sunlight and the Moon albedo is expected to be sufficient during the lunar day, even when operating in some shadowed regions. Artificial illumination will be required in the PSR and in other shadowed regions where the lunar albedo is not sufficient.

5. CONCLUSION AND FUTURE WORK

The concept of LUVMI and early work was presented in this paper. After a mission and operation concept definition phase, core technologies are in the process of being developed - the instruments prototypes, targeting a TRL of 6, and the mobility platform (rover) targeting a TRL of 4-5.

LUVMI is expected to result in a viable and affordable mission paradigm for Moon polar science missions, that should allow establishing by 2020 an innovative participation and funding approach involving non-institutional sources (with a target of 25% of the development costs).

6. ACKNOWLEDGEMENT

LUVMI is funded under the European Commission Horizon 2020 programme, with grant number 727220.

7. REFERENCES

[1]. LEAG Volatiles Specific Action Team, Final Report, Dec. 2014

[2]. A. Colaprete, P. S. (2010). Detection of Water in the LCROSS Ejecta Plume. Science, 463-468.

[3]. Mitrofanov, M. L. (2012). Testing polar spots of water-rich permafrost on the Moon:. Journal of Geophysical Research.

[4]. M. Zuber, J. H. (2012). Constraints on the volatile distribution within Shackleton crater at the lunar south pole. *Nature*.

[5]. P. Spudis, D. B. (2010). Initial results for the north pole of the Moon from Mini-SAR, Chandrayaan-1 mission. *Geophysical Research Letters*.

[6]. P. Spudis, S. N. (1998). The clementine bistatic radar experiment: Evidence for ice on the moon. *Solar System Research*, 17-22.

[7]. S. Parzinger, M. M. (2013). Experimental Feasibility Study of On-Site Detection of OH/H2O due to In-Situ Thermal Processing of Lunar Regolith. *43rd International Conference on Environmental Systems*.

[8]. Wright, I.P., et al., "CHO-bearing organic compounds at the surface of 67P/Churyumov-Gerasimenko revealed by Ptolemy," in Science, vol. 349, no. 6247, 2015.

[9]. Morse, A.D., et al., "The Rosetta campaign to detect an exosphere at Lutetia," in Planetary and Space Science, vol. 66, no. 1, pp. 165–172, 2012.

[10]. IPW Beagle2 2003

[11]. Smith,A. et al., "LunarEX: a proposal to cosmic vision," in Experimental Astronomy, vol. 23, no. 3, pp.711-740, 2009.

[12]. Sheridan, S et al., "A carbon nano tube electron

impact ionisation source for low-power, compact spacecraft mass spectrometers," in Advances in Space Research, vol. 49, no. 8, pp.1245-1252, 2012

[13]. "APPS Autonomous Planetary Payload Support System", OHB, APPS-RP-CGS-002, no. 1, June 2014.