Carleton UNIVERSITY

FFC Cambridge Process with Metal 3D Printing as Universal In-Situ Resource Utilisation

Alex Ellery[1], Paul Lowing[2], Priti Wanjara[3], Mark Kirby[4], Ian Mellor[2], Greg Doughty[2]

[1] Carleton University, Canada; [2] Metalysis, UK; [3] National Research Council, Canada; [4] Renishaw, Canada

Advanced Space Technology for Robotics & Automation (ASTRA 2017), Leiden, Netherlands, 20-22 June 2017

Preamble

- Fundamental problem of human spaceflight
- Human is weakest component of a spacecraft – it requires enormous inputs of material and energy resources while expelling enormous outputs of material waste
- Closed ecological life support system (CELSS) attempts to compensate by recycling material throughput
- Ecology implies closed recycling system to minimise irreversible consumption
- Imperfect recycling → requirement for supply source
- CELSS supplemented by in-situ resource utilisation (ISRU)
- Most ISRU technologies to date are concerned with supplying consumable inputs to conventional environment control and life support system (ECLSS)

  - water

  - oxygen
- This is shallow ISRU

A Question of Morality

- Deep ISRU relates in-situ infrastructure construction, maintenance, repair and growth
- CELSS approach to deep ISRU on the Moon
- Objectives

  (i) near-100% supply from in-situ resources

  (ii) near-100% closed cycle industrial ecology
- Question - is it desirable for humans to bring their profligate and destructive habits with them as they embark into the space environment?
- Answer – we already have, by trailing our detritus with us up to GEO
- Commitment – we must not continue to degrade everything we touch beyond GEO
- Solution – sustainable exploration is built on two pillars:

  (i) dematerialisation through minimisation of material consumption

  (ii) detoxification of waste
- Industrial ecology addresses (ii) by converting waste into resources

ISRU through Industrial Ecology

- Industrial ecology must be built into human exploration and colonisation goals UPFRONT as a fundamental design requirement, not as an ad hoc afterthought
- **IPAT equation** quantifies impact to be minimised – impact is complex function of cost of launch of materiel from Earth

  I=PAT where P=population of industrial products produced by deep ISRU

  A=cumulative resource units consumed per product produced (dematerialisation)

  T=impact per resource unit consumed (detoxification)
- **Industrial ecology** seeks to reduce impact T through recycling
- **Self-replication technology** requires minimisation of A for material and energy closure
- Industrial ecology minimises waste of one process by feeding it as input to other processes
- Closed loop recycling with 100% is highly desirable
- Cradle-to-cradle sustainability requires recycling at EOL – this is enabled by 3D printing of powdered feedstock
- Only imported reagent is NaCl (salt contingency) which is recycled
- FFC Cambridge process and 3D printing lie at the core of our evolving lunar industrial ecology

FFC Cambridge Process

- Electrolytic reduction vs thermochemical reduction
  - higher product yields
  - reduced impurities
- FFC Cambridge process reduces mineral oxides to 99% pure metal
- Sintered metal cathode in $CaCl_2$ electrolyte at modest temperatures
- Thermal heating may be implemented by Fresnel lenses
- Electric al energy may be supplied by thermionic conversion with 10% efficiency
- Product is metal alloy sponge that can be crushed, powdered and sintered into rods
- O_2 released and stored for human consumption or propellant oxidiser

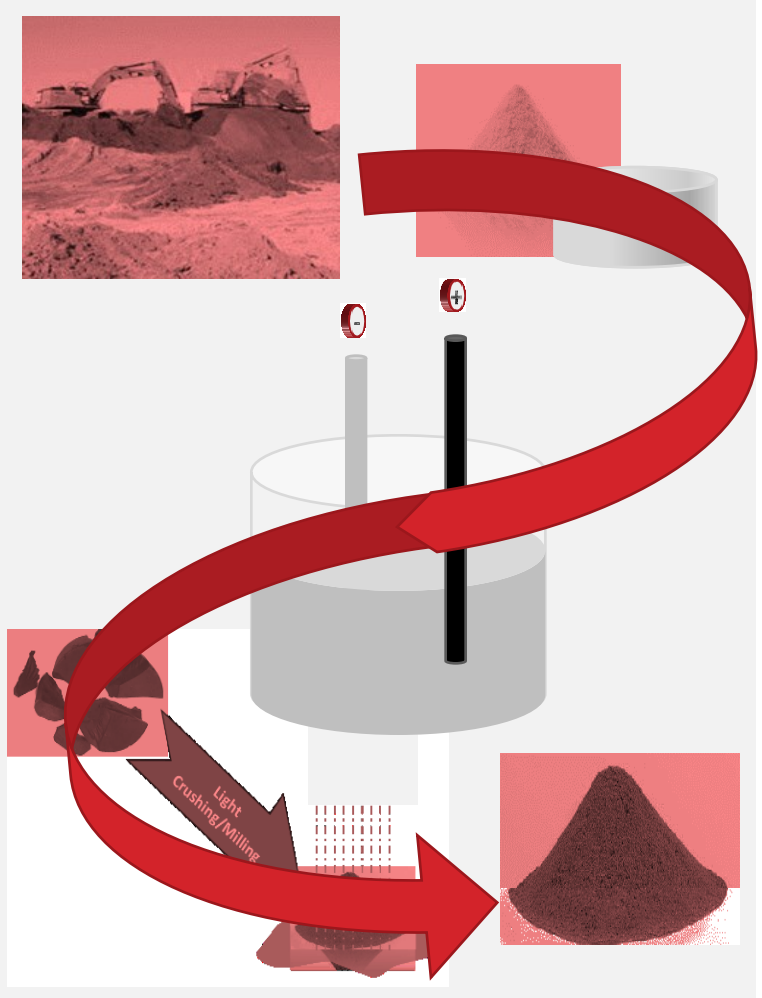

Metalysis Process Overview

- Proven electrolytic process which can reduce metal oxides or ores into pure metals or alloys
- Relatively low temperature operation and lower energy consumption than melting technologies
  - reduction takes place in the solid state
- Inexpensive components for electrolysis:
  - metal oxide cathode;
  - graphite anode;
  - molten salt.
- No toxic gases used – only waste-product is CO/CO_2 and by product is Graphene.
- Powder feed to powder product: pre-alloyed or ore feedstock may be used directly
- The technology is well-suited to the manufacture of powders for 3D printing applications.

Engineering Development Roadmap

2004 - PRESENT
GEN1

Prove concept

Production of Grams

✓ **Research**

2008- PRESENT
GEN2

Prove development

Production of Kilograms

✓ **Developme nt**

2014 – PRESENT
GEN3

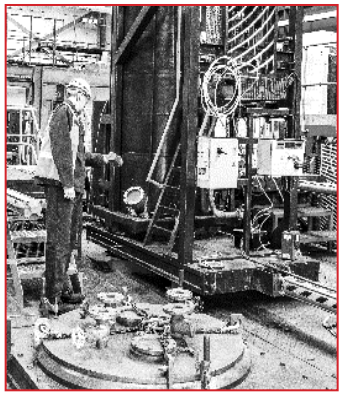

Commercial development

Production of Tonnes

✓ **Producing**

2016/ 2017
GEN4

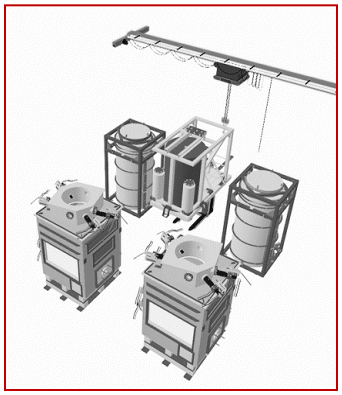

Industrial production

Production of 10s of Tonnes

✓ **Scale up**

2018+
GEN5

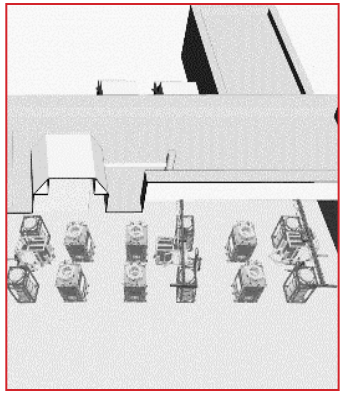

Large scale, industrial production

Production of 1000s of Tonnes

Lunar Material Inventory

Functionality	Lunar Material
Tensile structures	Wrought iron
Compressive structures	Cast iron
Elastic structures	Steel springs/flexures Silicone elastomers
Thermal conductors	Fernico (eg. kovar)
Thermal insulation	Glass (fibre) Ceramics such as TiO_2
Thermal tolerance	Tungsten
Electrical conduction	Fernico (e.g. kovar) Nickel
Electrical insulation	Glass Ceramic such as TiO_2 Silicone plastic Silicon steel
Active electronics	Kovar Nickel Tungsten Glass
Magnetic materials	Silicon steel Permalloy
Sensors and sensory transduction	Quartz Selenium
Optical structures	Polished nickel Glass
Liquids	Silicone oils Water
Gases	Oxygen Hydrogen

Lunar Volatiles

- Lunar rover provides surface mobility for resource mining – scoop regolith (bucket wheel) into a hopper
- RPM will demonstrate extraction of **volatiles** from lunar regolith - 96% $\mathbf{H_2}$ (~120 ppm), almost 4% He, variable H_2O, and trace amounts of **C**O, **C**O_2, **C**H_4, $\mathbf{N_2}$, NH_3, H_2**S**, **S**O_2, and noble gases such as **Ar**
- Gases are preferentially adsorbed onto small particles of ilmenite ($FeTiO_3$) – extracted magnetically/electrostatically
- Heating regolith to 700°C releases 90% of volatiles
- **Fractional distillation** may be employed to separate
- fractions: He (4.2 K), H_2 (20 K), N_2 (77 K), CO (81 K), CH_4 (109 K), CO_2 (194 K) and H_2O (373 K)

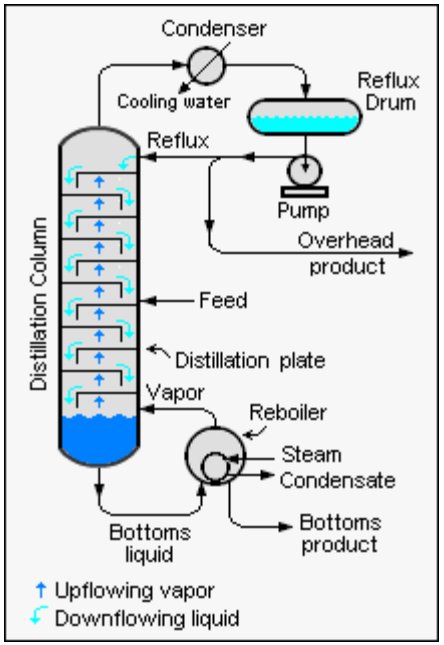

Silicone Oils/Plastics Manufacture

- **Silicone plastics** offer advantages over hydrocarbon plastic
  (i) UV radiation resistant
  (ii) High operational temperature tolerance (350°C c.f. 120°C)
  (iii) Si backbone minimises C resource consumption
  (iv) use of flexible thermal insulation (wire sheathing)
- Formation of syngas at 850°C and 4 MPa over **Ni** catalyst: $CH_4 + H_2O \rightarrow CO + 3H_2$
- Formation of methanol (or higher alcohol) at 250°C and 5-10 MPa over $\mathbf{Al_2O_3}$ catalyst:
  $CO + H_2 \rightarrow CH_3OH$
- Formation of chloromethane by **HCl** action at 350°C $\mathbf{Al_2O_3}$ catalyst:
  $CH_3OH + HCl \rightarrow CH_3Cl + H_2O$
- Formation of dialkyl dichlorosilane from **Si** at 370°C in presence of catalyst (**Ni replace Cu**?):
  $2CH_3Cl + Si \rightarrow (CH_3)_2SiCl_2$
- Formation of polydimethylsiloxane (PDMS) – simplest siloxane – by **hydrolysis**:
  $n(CH_3)_2SiCl_2 + nH_2O \rightarrow ((CH_3)_2SiO)_n + 2nHCl$
- HCl is recycled – Cl required from salt contingency

FFC Cambridge Process – Raw Minerals

- FFC Cambridge process reduces lunar **ilmenite ($FeTiO_3$)** from maria regions to **FeTi alloy**:
  (i) general purpose structures
  (ii) Ferrotitanium (45-75% Ti) alloy for oxidant mop-up purification
  (iii) Pyrotechnic powder fuel with O_2
- Properties of FeTi alloy requires investigation

- FFC Cambridge process reduces lunar **anorthite ($CaAl2Si_2O_3$)** from highland regions to **AlCaSi alloy**:
  (i) general purpose structures
  (ii) Silumin (3-25% Si) alloy for high durability, e.g. moving parts for machines
- Properties of AlCaSi alloy requires investigation

- FFC Cambridge process reduces lunar **olivine (Mg_2SiO_4)** from crater regions to **MgSi alloy**
  (i) general purpose structures
  (ii) small amounts of Mg_2Si additive to Al produces high strength Al alloy
- Greatest use of FFC Cambridge process is the reduction of pure oxides

Any Old Iron

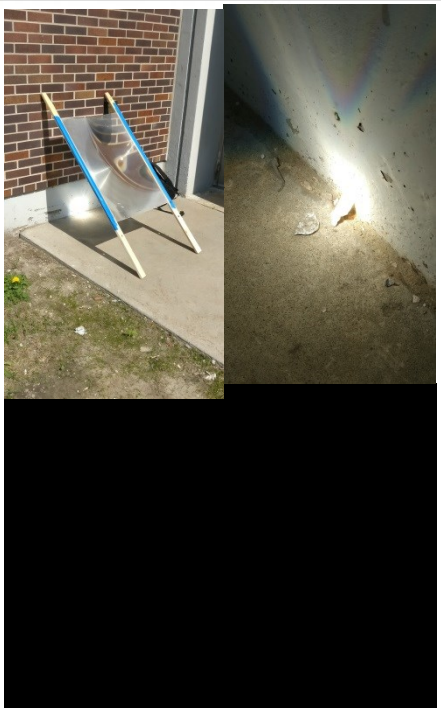

- **Hydrogen reduction of ilmenite** at 1000°C:

  $FeTiO_3 + H_2 \rightarrow Fe + TiO_2 + H_2O$

  $2H_2O \rightarrow 2H_2 + O_2$
- Further heating to 1600°C allows bleeding of molten Fe
- H_2 is recycled and O_2 stored
- We have demonstrated **Fresnel lens smelting of Al alloy**
- **Wrought iron** is tough and malleable for structures
- **Tool steel** (<2% **C** + 9-18% **W**) for cutting tools
- **Silicon (electrical steel)** (up to 3% **Si** and 97% Fe) for electromagnets and motor cores
- **Kovar** (53.5% Fe, 29% **Ni**, 17% **Co**, 0.3% Mn, 0.2% **Si** + <0.01% **C**) has high electrical/thermal conductivity
- **Permalloy** (20% Fe + 80% **Ni**) provides magnetic shielding

FFC Cambridge Process

- From ilmenite reduction, impure Fe may be further purified using FFC Cambridge process
- Originally developed to replace Kroll process to extract Ti from rutile (**TiO_2**)

RUTILE INPUT

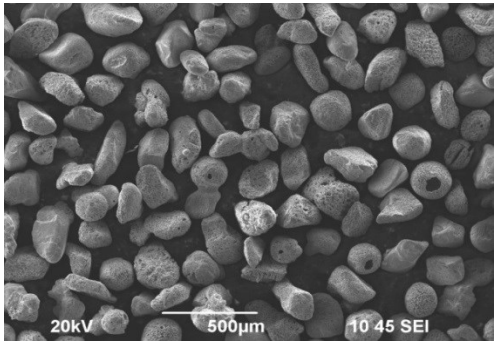

TI OUTPUT

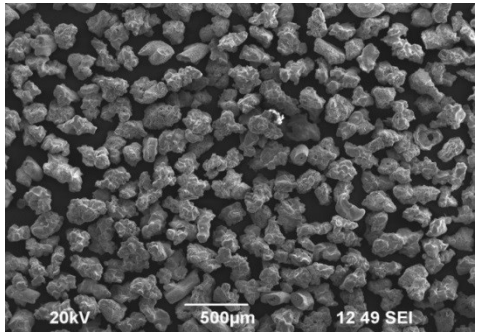

- Carbothermic reduction of anorthite at 1650°C yields **Al_2O_3** to be reduced to Al

  $CaAl_2Si_2O_8 + 4C \rightarrow CaO + Al_2O_3 + 2Si + 4CO$
- Artificial weathering of anorthite with HCl yields **SiO_2** to be reduced to Si

  $CaAl_2Si_2O_8 + 8HCl + 2H_2O \rightarrow CaCl_2 + 2AlCl_3.6H_2O + 2SiO_2$

  This produces **$CaCl_2$ electrolyte** for FFC Cambridge process
- Si for fused silica glass manufacture, quartz production and for silicon steel

Tunico Recovery

- **Mascons** in impact craters indicate location of NiFe meteorite ores – sometimes as magnetic anomalies, eg. rim of South Pole Aitken crater - similar to Sudbury astrobleme
- Kamacite/taenite (**NiFe alloys**) is typically **contaminated with Co**
- **Mond process** at 40-80°C reacts impure **Ni** with CO and S catalyst which is reversed at 230°C/60 bar: $Ni(CO)_4 \leftrightarrow Ni + 4CO$
- S catalyst recovered at 750-1100°C from troilite (FeS) in meteoritic inclusions, lunar regolith (~1%), or lunar volatiles
- **Co fraction of NiFe alloy adjusted by mixing recovered Fe and Ni metal**
- Permalloy may be used as mu-material for magnetic shielding with $\mu_r \sim 10^5$ (replace 5% Ni with Mo gives supermalloy with $\mu_r \sim 10^6$)
- Meteoritic NiFe alloys **enriched in W microparticle inclusions** which can be crushed and separated by froth flotation (W has high density of 19.3 and high melting temperature of 3500°C)

FFC Cambridge Feedstock to 3D Printing

- Additive/layered manufacturing (3D printing) involves cartesian robot configurations without tooling – **SLS** (multimaterial), **EBF3** (metal), **FDM** (plastic)
- Solar concentrator-based printing on Moon (**Fresnel lenses**)

- FFC Cambridge process outputs metal powders
  - direct input to powder bed such as SLS/SLM (e,g. Renishaw)
  - powder sintered into rod for EBF3 (e.g. NRC)

- SLS-printed structure from Ti powder

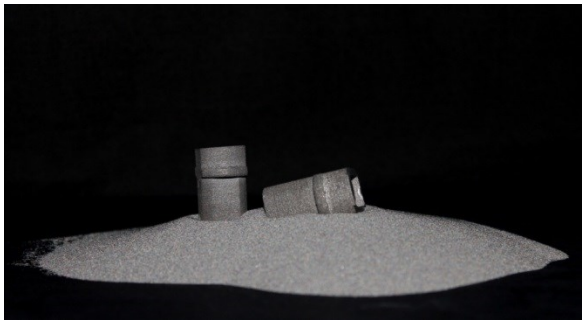

- 3D printing is a versatile manufacturing method that offers much potential

3D Printer as Universal Constructor

- UC is a machine that can manufacture any other machine *including a copy of itself* (generalisation of the universal Turing machine)

- RepRap can print its own plastic parts **but** it cannot print:
  (i) structural metal bars (metal printing – discussed earlier)
  (ii) joinery (replaced with cement/adhesive)
  (iii) **motors**
  (iv) **electronics/computer**
  (v) **self-assembly** (by proxy)
- Motor system – actuators, control electronics and sensors - is **core of all machines**: 3DP, milling, turning, pumping, surface finishing, robots, vehicles, drills, etc

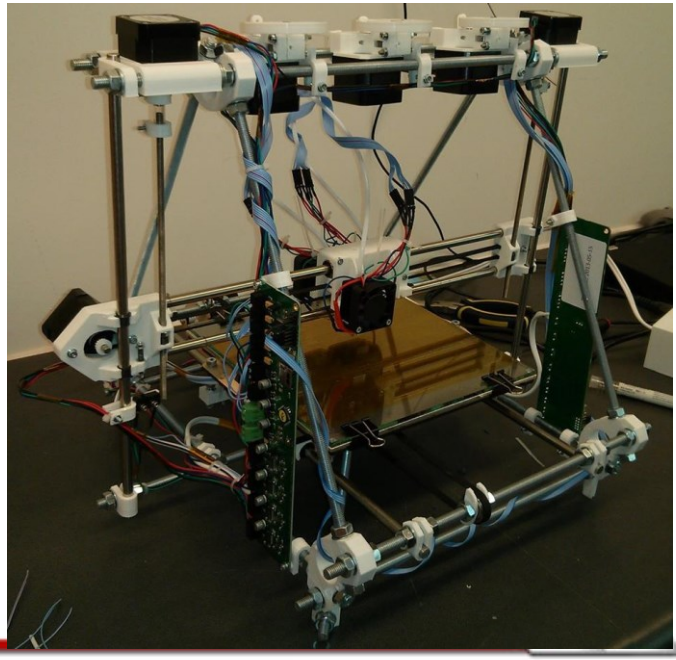

3D Printed Motor Core

Our motor core comprises Fe powder in a plastic matrix

- 50% silicon steel particles in PLA matrix (NRC Canada)

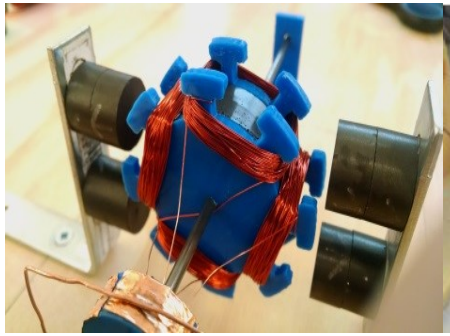

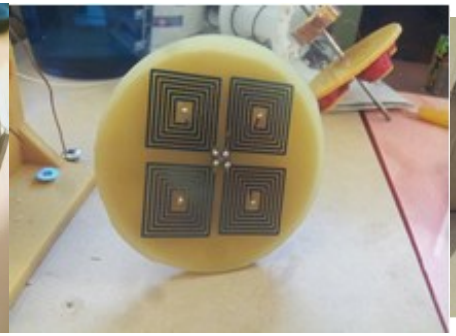

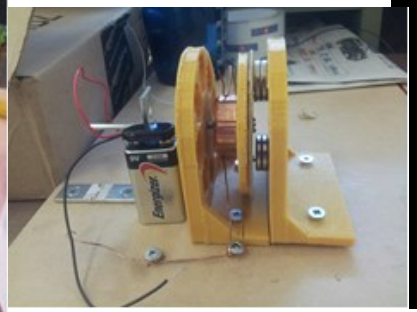

[redacted]

- Pancake motor to test lithographically-printed wiring patterns
- We are working on a completely printed motor

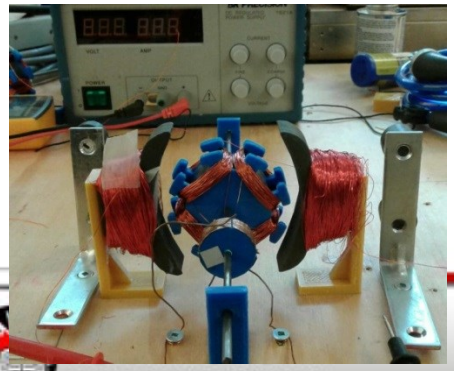

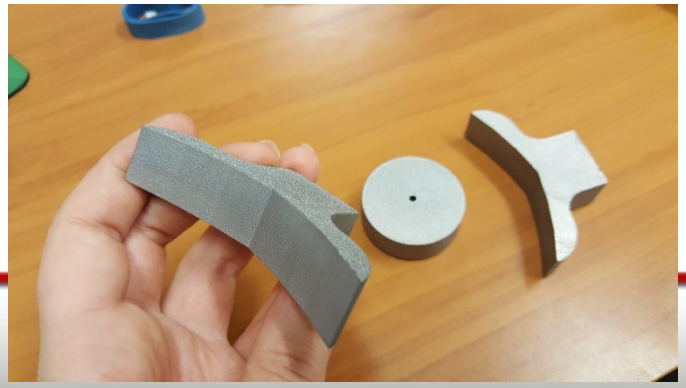

[redacted]

DIY Multi-Material 3D Printing

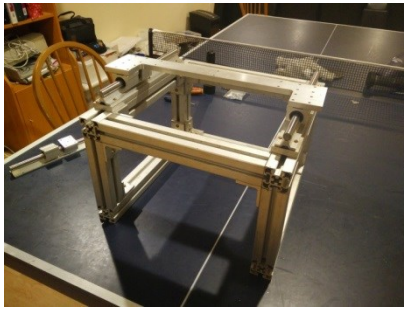

- New “hobbyist” 3D printer to print in multiple materials
- An integrated **milling head** will provide surface machining
- **Fresnel lens** feed into fibre optic bundle
- Deposit molten Al wire tracks onto silicone plastic insulation:

  Al alloy (440°C m. p.) ↔ silicone (350°C op temp)

- Temperatures of 1600°C are sufficient for **steel alloys**
- Print kovar wire onto ceramic silica substrates
- **Silicone plastic converted to silica ceramic** by high temperature combustion in oxygen

  $SiO_xC_y + (1\text{-}x+2y)O_2 \rightarrow SiO_2 + yCO_2$
- Silicone plastic 3D printed using FDM – converted to ceramic with CO_2 recovery – steel printed onto silica substrate

3D-Printable Electronics

- Solid state electronics requires complex processing so cannot be manufactured in-situ
- **Vacuum tubes** are of simple construction that is potentially printable
- They are thermionic diodes which use **kovar** resistance wire to heat **tungsten** cathode to 1000-2000°C to **nickel** anode in a evacuated **glass** envelope
- CPU-based architectures grow **exponentially** but neural nets grow **logarithmically**
- **Recurrent neural nets** are Turing-equivalent
- Neural net act as compressed program output of 3D printer (TM model)
- Our modified **Yamashida-Nakaruma** hardware "printable" neuron comprises a weighted input, summing integrator and signum output
- We have demonstrated a two-neuron hardware circuit on a desktop rover implementing real time obstacle avoidance

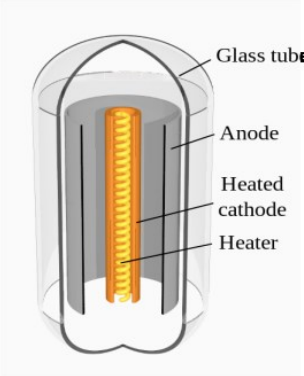

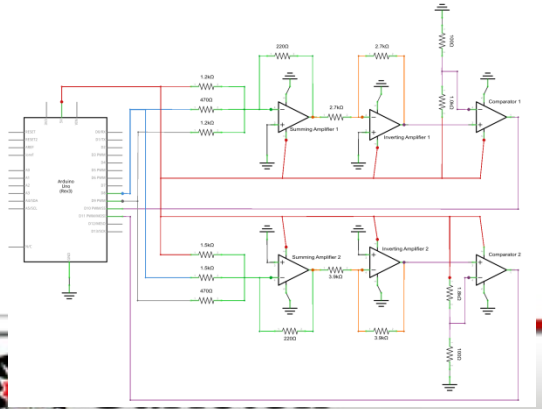

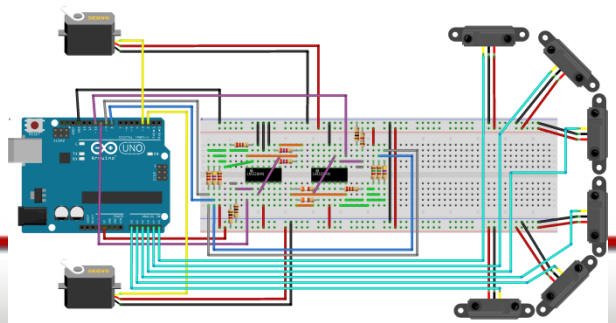

Power of Self-Replication

- Low-cost enabled through lunar **in-situ resources** (ISRU) and **self-replication** technology
- **Exponentially** increasing productive capacity as ~$(x+1)^n$
- Consider launch of a single 1 tonne self-replicating factory to the Moon at a cost of $2B

Number of offspring per generation	Number of generations	Population	Specific ($/kg)
1	10	1024	
2	7	2187	<$1000/k
2	13	1,594,323	<$1.25/kg

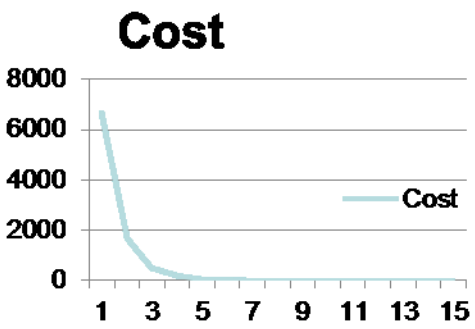

- Cumulative population is over 2 x **10^6 after 13 generations**
- On reaching full capacity, each of the10^6 factories can produce 10^6 products/cycle
- My approach is to build from the bottom-up like the biological evolution rather than top-down like Agency-ese!

Wrap-Up

- We are working towards a fully 3D printed RAD-HARD cubesat including motors and circuits
- Multifunctional structures – neural net embedding
- Electric power from Fresnel lenses heating cathode for thermionic emission (as in nuclear reactors) with $\eta \sim 10\%$ - vacuum tube technology
- Energy storage by motorised flywheels
- Combination of FFC Cambridge and multimaterial 3D printing offer the prospect of universal construction
- We have the beginnings of an industrial ecology to support general purpose manufacturing on the Moon